STOP -TITE®

Vehicle Restraint

Owner's/User's Manual

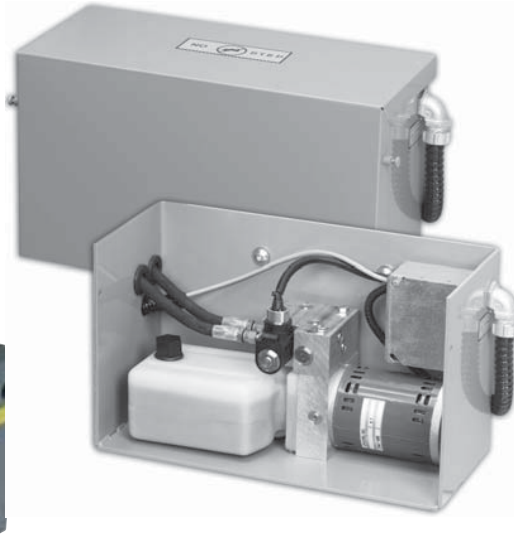

MCGUIRE • DIVISION OF SYSTEMS, INC. • W194 N11481 McCormick Drive • Germantown, WI 53022
800.624.8473 • fax: 262.255.5917 • www.**wbmcguire**.com • techservices@docksystemsinc.com

Printed in U.S.A.
Copyright © 2014

Manual No. 4111-0015
May 2014

Table of Contents

Page

Safety
Recognize Safety Information 1
General Operational Safety Precautions 1
Operational Safety Precautions 2
Maintenance Safety Precautions 4
Safety Decals 5
Placard installation 7
Owner's/User's Responsibilities 8

Introduction
General Information 9

Installation
Install Details - Automatic 10
Install Details - Manual 12
Install Control Panel and wiring 14

Operation
Operating Instructions 15

Troubleshooting
Troubleshooting 16

Maintenance
Periodic Maintenance 18

Parts
Mechanical Stop-Tite Components 20
Hydraulic Stop-Tite Components 22
Scissors Break down 24
Powerpack Assembly 26
Electrical 28
Outside Signs 30
Outside Light Assembly 31
Operations Placards 32

Miscellaneous
Customer Information 33
Warranty ..... Back Cover

Recognize Safety Information

Safety-Alert Symbol

The Safety-Alert Symbol identifies important safety messages on equipment, safety signs, in manuals, or elsewhere. When you see this symbol, be alert to the possibility of personal injury or death. Follow the instructions in the safety message.

DANGER

The use of the word DANGER signifies the presence of an extreme hazard or unsafe practice which will most likely result in severe injury or death.

WARNING

The use of the word WARNING signifies the presence of a serious hazard or unsafe practice which may result in serious injury or death.

CAUTION

The use of the word CAUTION signifies possible hazard or unsafe practice which could result in personal injury.

IMPORTANT

The use of the word IMPORTANT is to draw attention to a procedure that needs to be followed to prevent machine damage.

General Operational Safety Precautions

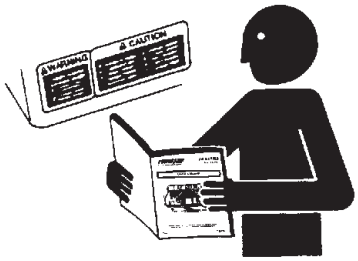

Read and understand the operating instructions and become thoroughly familiar with the equipment and its controls before operating the dock leveler or truck restraint.

Never operate a dock leveler or truck restraint while a safety device or guard is removed or disconnected.

Never remove DANGER, WARNING, or CAUTION signs or decals on the equipment unless replacing them.

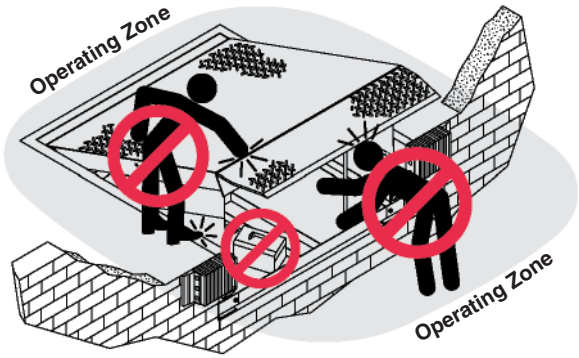

Do not start the equipment until all unauthorized personnel in the area have been warned and have moved outside the operating zone.

Remove any tools or foreign objects from the operating zone before starting.

Keep the operating zone free of obstacles that could cause a person to trip or fall.

Operational Safety Precautions

Learn the safe way to operate this equipment. Read and understand the manufacturer's instructions. If you have any questions, ask your supervisor.

DANGER

Stay clear of dock leveling device when the transport vehicle is entering or leaving area.

Do not move or use the dock leveling device if anyone is under or in front of it.

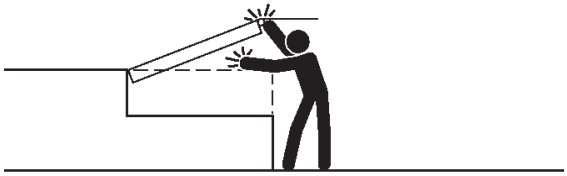

Keep hands and feet clear of pinch points. Avoid putting any part of your body near moving parts.

WARNING

Chock/restraint all transport vehicles. Never remove the wheel chocks until loading or unloading is finished and transport vehicles driver has been given permission to drive away.

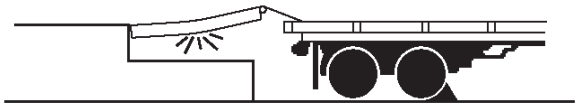

Do not use a broken or damage dock leveling device. Make sure proper service and maintenance procedures have been performed before using.

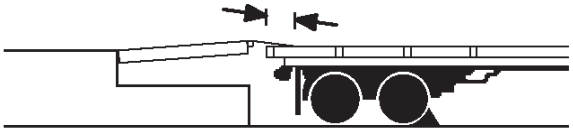

Make sure lip overlaps onto transport vehicle at least 4 in. (102 mm).

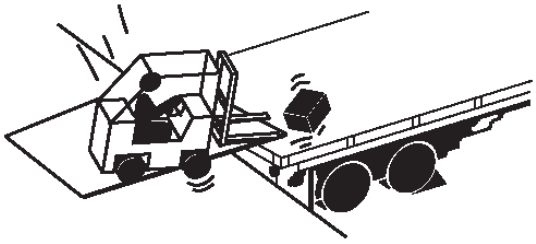

Keep a safe distance from both side edges.

WARNING

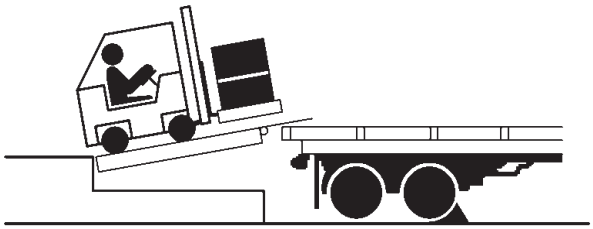

Do not use dock leveling device if transport vehicle is too high or too low.

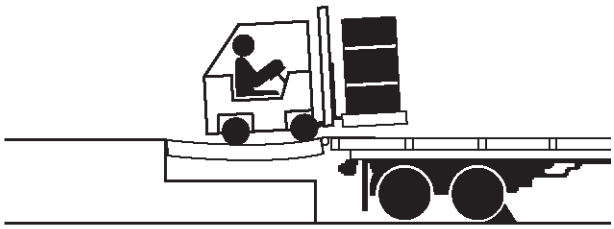

Do not overload the dock leveling device.

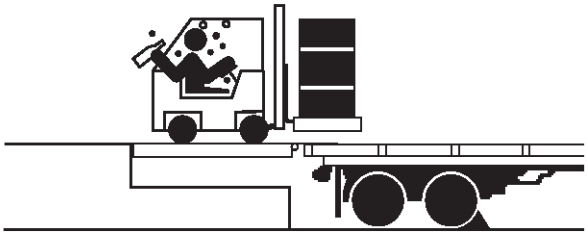

Do not operate any equipment while under the influence of alcohol or drugs.

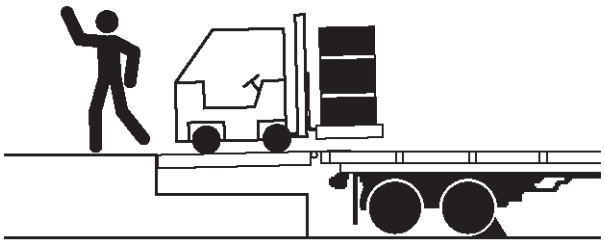

Do not leave equipment or material unattended on dock leveling device.

Maintenance Safety Precautions

DANGER

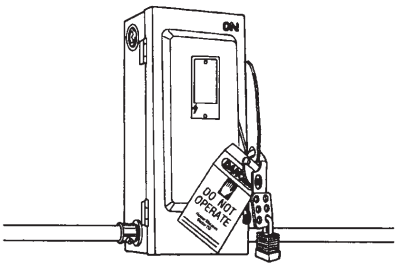

Hydraulic and electrical power must be OFF when servicing the equipment. For maximum protection, use an OSHA approved locking device to lock out all power sources. Only the person servicing the equipment should have the key to unlock the device.

CAUTION

Always post safety warnings and barricade the work area at dock level and ground level to prevent unauthorized use of the unit before maintenance is complete.

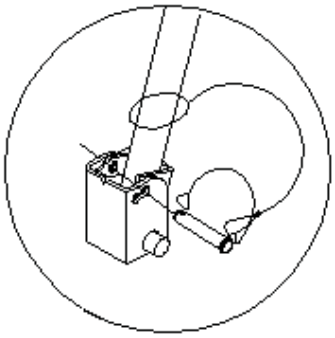

Access under the dock leveler may be required to service the vehicle restraint. The maintenance prop must be in the upright “service” position when working under the dock leveler. For maximum protection, use an OSHA approved locking device to lock the maintenance prop in the service position. Only the person servicing the equipment should have the key to unlock the device.

WARNING

ALWAYS disconnect electrical power source and ground wire before welding on dock leveler.

DO NOT ground welding equipment to any hydraulic or electrical components of the dock leveler. Always ground to the dock leveler frame.

Failure to follow these instructions may result in damage to dock leveler and/or serious personal injury or death.

WARNING

DO NOT grind or weld if hydraulic fluid or other flammable liquid is present on the surface to be ground or welded

DO NOT grind or weld if uncontained hydraulic fluid or other flammable liquid is present. Stray sparks can ignite spills or leaks near the work area. Always clean up the oil leaks and spills before proceeding with grinding or welding.

Always keep a fire extinguisher of the proper type nearby when grinding or welding.

Failure to follow these instructions may result in serious personal injury or death.

WARNING

ALWAYS stand clear of dock leveler lip when working in front of the dock leveler. Failure to do this may result in serious personal injury or death.

Safety Decals

Every 90 days (quarterly) inspect all safety labels and tags to ensure they are on the dock leveler and are easily legible. If any are missing or require replacement, please call 1-800-643-5424 for replacements.

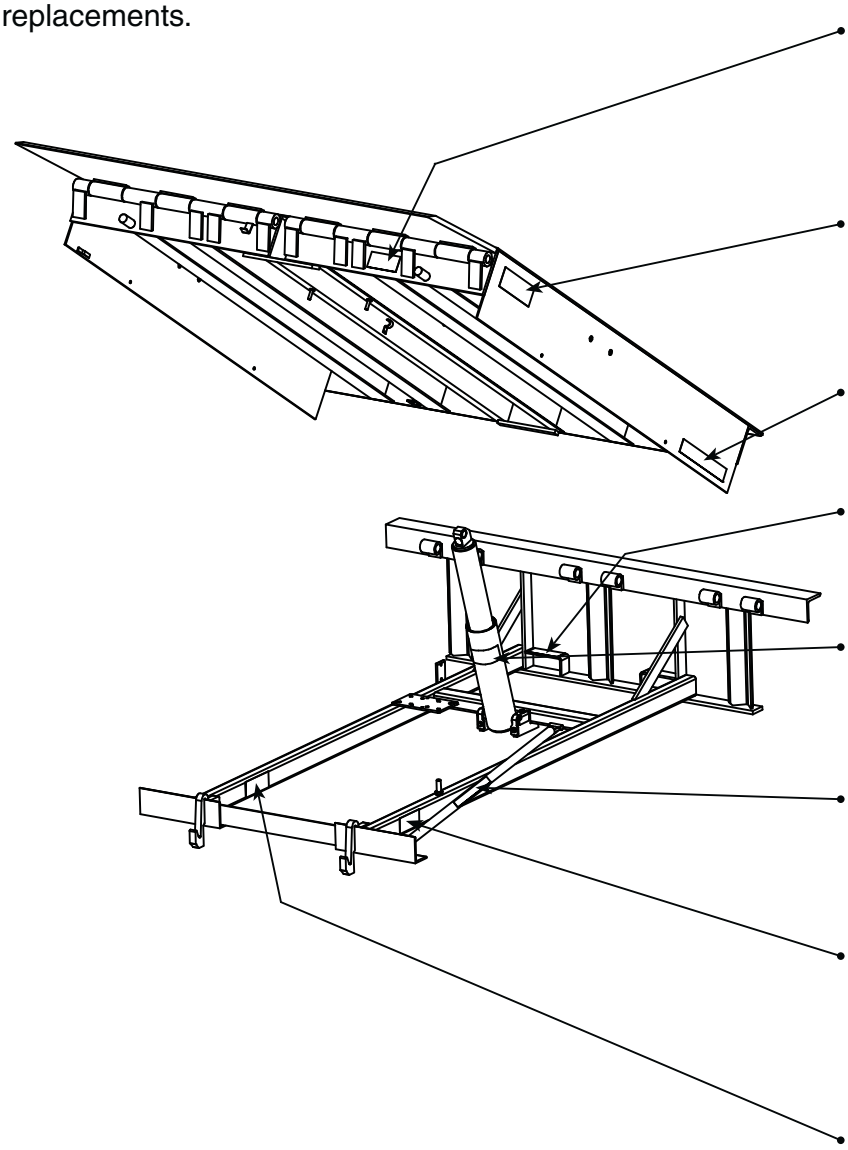

1751-0727

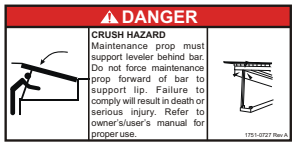

1751-0730 (x2)

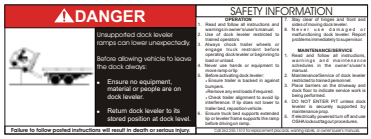

(decal placed in same position on both sides)

1751-0329 (x2)

(decal placed in same position on both sides)

1751-0330 (x2)

(decal placed in same position on both sides)

1751-0138

1751-0729

1751-0731

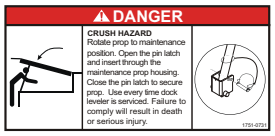

1751-0726

Note
This is a example of dock leveler safety decals. See manual for your specific model for correct safety decal sheet or consulate Tech Serves

Safety Decals

Every 90 days (quarterly) inspect all safety labels and tags to ensure they are on the dock leveler and are easily legible. If any are missing or require replacement, please call 1-800-643-5424 for replacements.

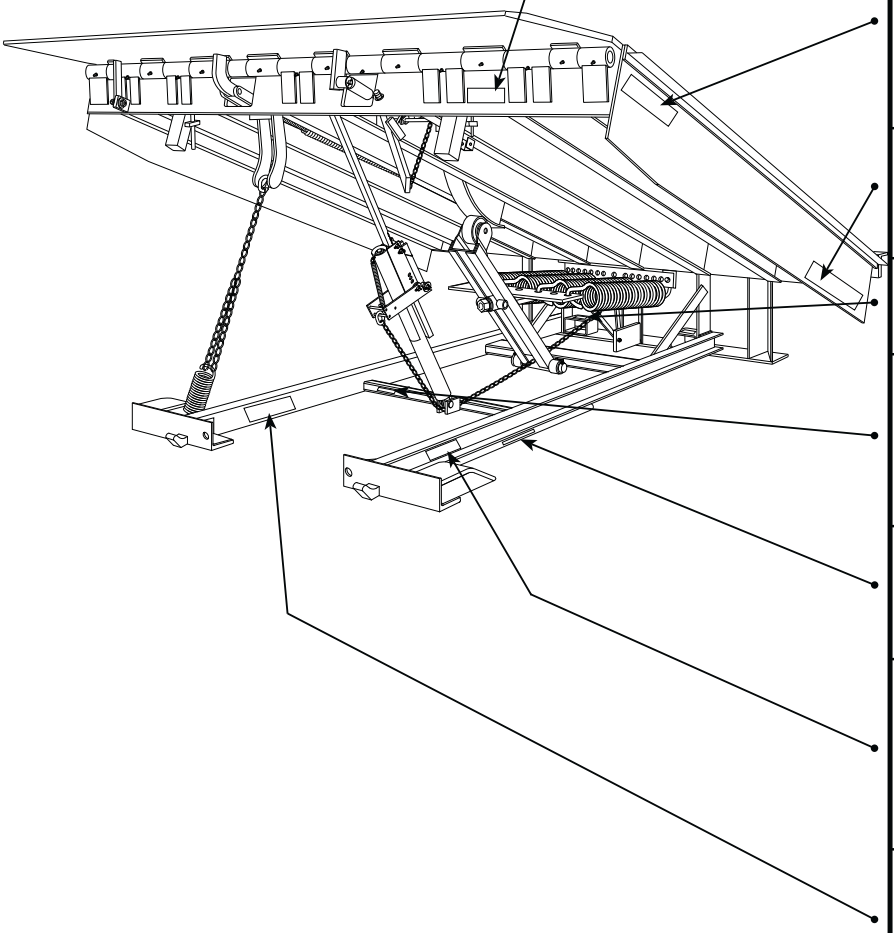

1751-0727

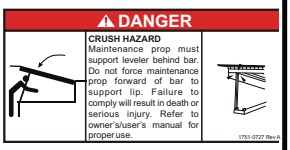

1751-0730 (x2)

(decal placed in same position on both sides)

1751-0329 (x2)

(decal placed in same position on both sides)

1751-0330 (x2)

(decal placed in same position on both sides)

1751-0728

1751-0788

1751-0789

1751-0726

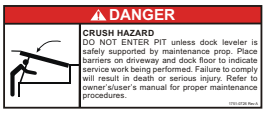

Note
This is a example of dock leveler safety decals. See manual for your specific model for correct safety decal sheet or consulate Tech Serves

Placard Installation Instructions

- Owner is responsible for the installation and placement of product placards.
- Make sure placard is in plain view of dock leveler operations.
- Suggested placement of placard is near control box attached to electrical conduit by using nylon tie. If there is no control box present, mount placard on wall to the immediate left of leveler at eye level.

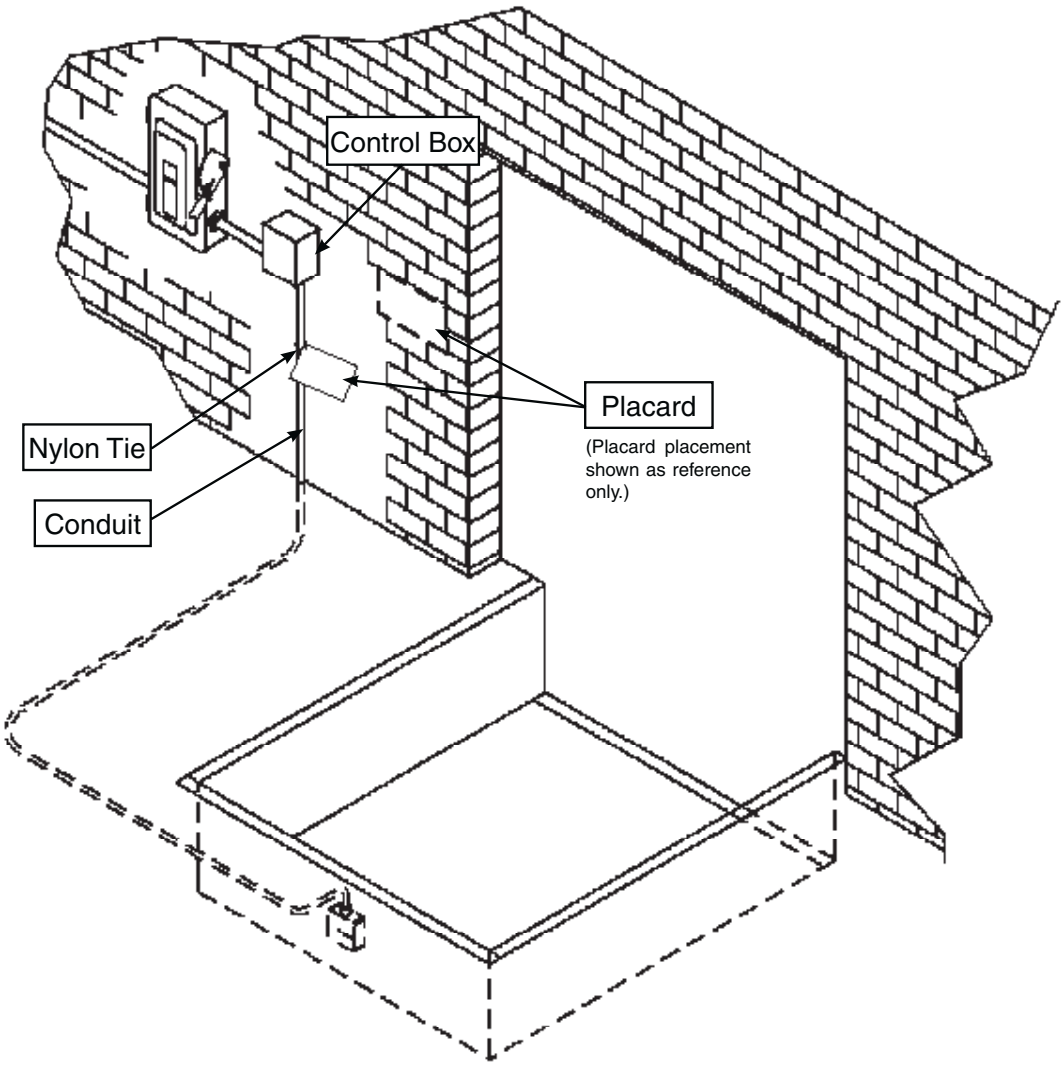

OWNER'S/USER'S RESPONSIBILITIES

1. The owner/ user should recognize the inherent dangers of the interface between the loading dock and the transportation vehicle. The owner/ user should, therefore, train and instruct all operators in the safe operation and use of the loading dock equipment in accordance with manufacturer's recommendations and industry standards. Effective operator training should also focus on the owner's/user's company policies and operating conditions. Maintaining, updating and re training all operators on safe working habits and operation of the equipment, regardless of previous experience, should be done on a regular basis and should include an understanding and familiarity with all functions of the equipment. Owner's/user's shall actively maintain, update and retrain all operators on safe working habits and operations of the equipment.

2. The manufacturer shall provide to the initial purchaser all necessary information regarding Safety Information, Operation, Installation and Safety Precautions, Recommended Initial and Periodic Inspections Procedures, Planned Maintenance Schedule, Product Specifications, Troubleshooting Guide, Parts Break Down, Warranty Information, and Manufacturers Contact Information, as well as tables to identify the grade(slope) for all variations of length or configuration of the dock leveling device and information identifying the maximum uncontrolled drop encountered when sudden removal of support while in the working range of the equipment.

3. It is recommended that when the transportation vehicle is positioned correctly in the dock opening and in contact with both bumpers, there shall be a minimum of 4.00 inches (100mm) overlap of the leveling device and the transportation vehicle at all times during the loading and unloading process.

4. The Owner/User must review all name plates, placards, decals, instructions and posted warnings and place the same in view of the operator or maintenance personnel for whom such warnings are intended for. Contact manufacturer for any replacements.

5. Manufacturer's recommended periodic maintenance and inspection procedures in effect at the date of shipment shall be followed at all times. Written documentation of maintenance, replacement parts or damage should be retained. In the event of damage notification to the manufacturer is required.

6. Loading dock equipment that has been structurally damaged or has experienced a sudden loss of main support while under load (such as what might occur when a transport vehicle pulls out from under the leveling device) shall be removed from service, inspected by a manufacturer's authorized representative, and repaired or replaced as needed before being placed back in service.

7. Any modifications or alterations of loading dock equipment shall only be done with prior written approval from the manufacturer and the same shall be at least as safe as the original equipment was prior to the modification and shall also satisfy all safety requirements of the manufacturer for the particular application of the leveling device.

8. When industrial moving devices are being used in the loading or unloading of product from the transportation vehicle, this vehicle shall have the brakes and wheel chocks applied appropriately or all other positive restraining device shall be fully utilized. It is recommended that trailers with air-ride suspension systems shall have its air exhausted prior to performing loading and unloading operation to minimize trailer bed drop.

9. Loading dock safety equipment should never be used outside of its intended use, vertical working range, or capacity. Please consult the manufacturer if you have any questions as to the use, vertical working range or capacity of the equipment. Only properly trained and authorized personnel should operate the equipment.

10. When selecting loading dock safety equipment, it is important to consider not only present requirements but also future plans and any possible adverse conditions, environmental factors or usage.

General Information

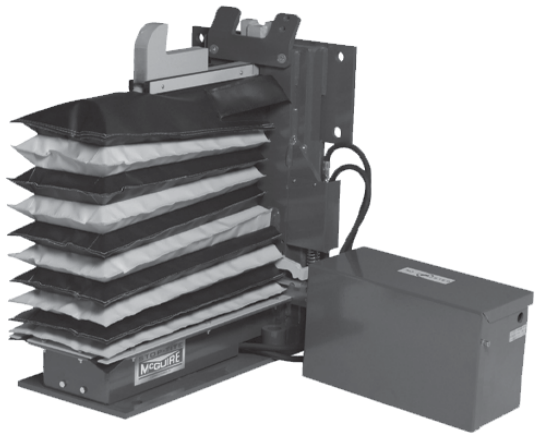

Congratulations on your choice of a Systems, Inc. vehicle restraint. This manual covers the Stop-Tite series hydraulic vehicle restraint.

Designed by Systems, Inc. to be a marvel of simplicity and efficiency, your vehicle restraint, when properly installed, will provide many years of trouble-free performance with an absolute minimum of maintenance. To obtain maximum performance and longest possible use, a simple program of preventive maintenance is recommended.

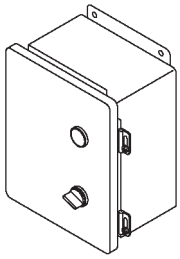

The Automatic (hydraulic) Stop-Tite series vehicle restraint comes equipped with an electrical control panel, which allows push button operation of the vehicle restraint functions. Each Stop-Tite dock vehicle restraint unit and control panel has been factory prewired and tested to ensure satisfactory operation.

To illustrate which connections are to be made in the field at installation, electrical drawings are included with each order or by contacting Systems, Inc. Technical Services.

Once again, thank you and congratulations on your purchase of a Systems, Inc. vehicle restraint.

Stop-Tite Stock Specifications

Stop-Tite vehicle restraints are available in the following models and options:

Stop-Tite M
Mechanical Stop-Tite

Stop-Tite M-ML
Mechanical Stop-Tite
Manual Inside and Outside Lights

Stop-Tite M-AL
Mechanical Stop-Tite
Automatic Inside and Outside Lights

Stop-Tite A-ML
Automatic Stop-Tite
Manual Lights

Stop-Tite A-AL
Automatic Stop-Tite
Automatic Inside and Outside Lights

Note:
All Stop-Tite models with the standard two level restraint hook have the same service range of 12” to 29-1/2” (304.8 mm to 749.3 mm)

With the optional Low Profile restraint hook the service range is 10” to 27-1/2” (254 mm to 698.5 mm)

Call Systems, Inc. to discuss available options to meet your specific needs.

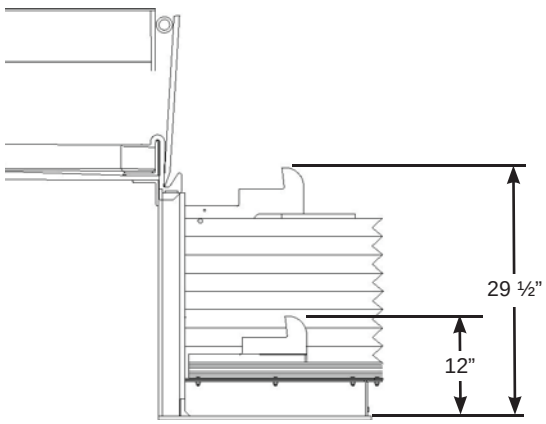

INSTALLATION DETAILS-AUTOMATIC Stop-Tite

Stop-Tite Overview

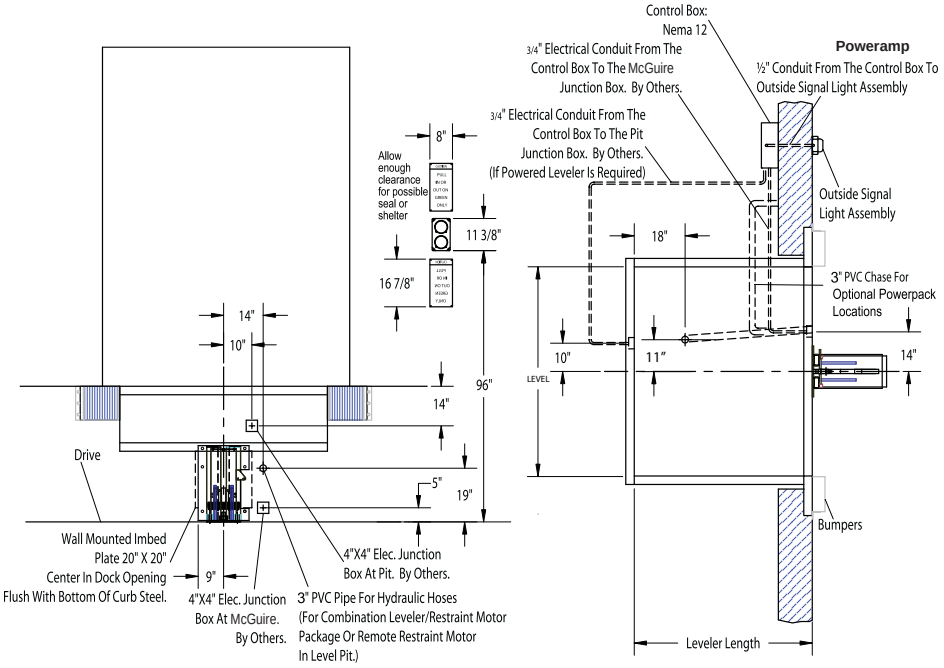

Stop-Tite Overview

Conduit, flexible or rigid, must be connected between the limit switch on the restraint and the powerpack. Wiring to and from the restraint must be limited to restraint wires only. Do not run high voltage lines through the same conduit as restraint wires. Conduit and associated hardware to complete wiring and mounting of powerpack are to be supplied by others.

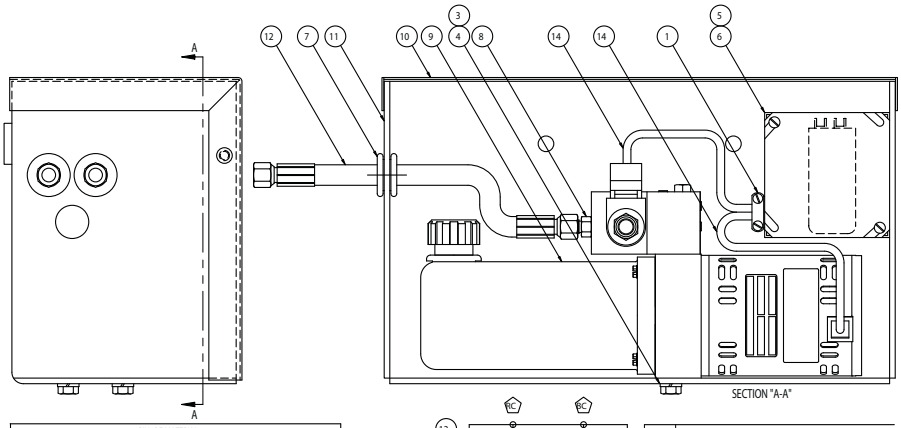

BILL OF MATERIAL				
ITEM	QTY	PART NO.	DESCRIPTION	SIZE
1	1	1431-0011	Connector - 2-Screw	3/8
2	3	1431-0086	Insulated Terminial	16-14 AWG
3	2	2101-0017	Hex Head Capscrew	3/8-16 UNC X 1
4	2	2101-0140	Lock Washer	3/8
5	1	2751-0016	Cover - J-Box	4 X 4
6	1	3051-0058	Capacitor - Motor Start	64-77mF - 330V
7	2	6431-0001	Grommet	1-3/8 OD X 3/4 ID
8	2	9301-0164	Fitting Conn Str Thrd	#4 ORB X #4 JIC
9	1	9391-0009	Powerpac - STOP-TITE	1PH - 115V - 1/4 HP - 1 GPM
10	1	9392-0045	Cover - STOP-TITE	B CAD
11	1	9393-0025	Powerpac Mounting Weldment	B CAD
12	2	9904-0097	Hyd Hose Assy - 1/4"100R1 X 24.00	#4 JICF SWIVEL BOTH ENDS
13	1	RS13-0050	Wire	16 GA RED X 5.00"
14	2	RS98-0090	Split Flex Conduit	1/4" X 9.00"

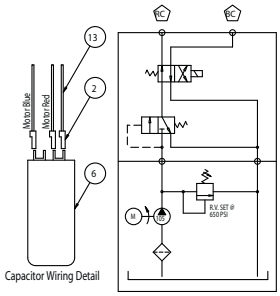

NOTE	DESCRIPTION
BC	CONNECT TO BASE END OF RELEASE CYL.
RC	CONNECT TO ROD END OF RELEASE CYL.

For comprehensive installation instructions of the Automatic STOP-TITE (STOP-TITE[A-AL]) read and understand the Installation and Operation Manual.

Powerpack Location Options

Coordinate powerpack location and hose length for proper placement.

Dock Face
Appropriate location when the likelihood of flooding, snow removal and damage from trailer/trucks is minimal.

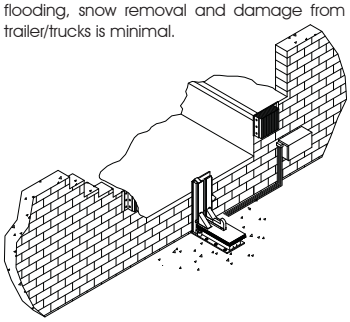

Under The Dock Leveler
When under the dock location is used, make certain to locate the powerpack where leveler will not interfere in below dock conditions. The routing of hydraulic and electrical lines from the powerpack to the restraint are best placed through min. 3" PVC (hydraulic) and 3/4" conduit (electricl) chase during pit construction.

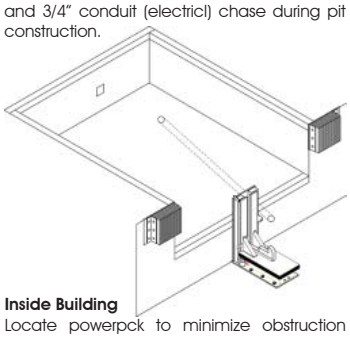

Inside Building
Locate powerpck to minimize obstruction potential. Hydraulic and electrical lines from the Powerpack to the restraint are best placed through min. 3" PVC (hydraulic) and 3/4" (electrical) chase during pit construction.

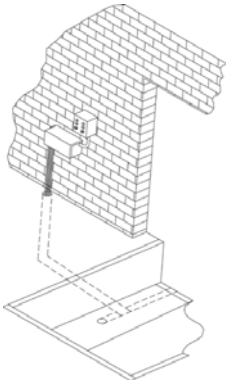

Concrete Dock Face (Standard installation)

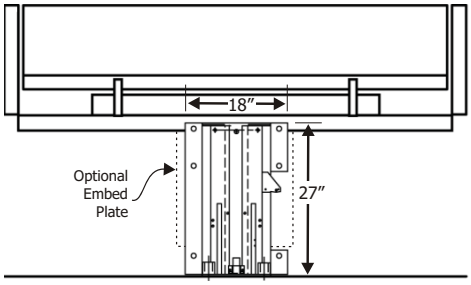

Wedge Anchors Method

Using back plate as a guide, drill six (6) holes for wedge anchors (3/4″x 5 1/4″ min.) (Kit #2103-0003)

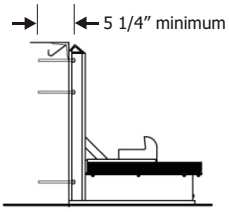

Wall Embed Method

Weld three sides of PowerStop back plate to the optional embed mounting plate (Part #7953-0119) with ten (10) 4″ long 1/4″ fillet welds.

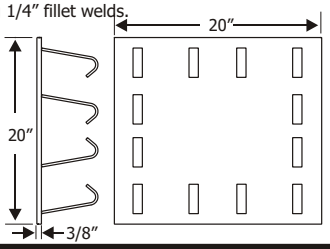

Low Pit Floor (Distance from pit floor to drive under 24”)

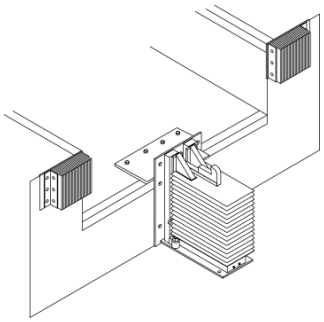

Anchor pit floor mounting plate (minimum 3/8″ x 20″W x 8″ D) (Part #9414-0056) with four (4) (3/4″x 5 1/4″ min.) wedge anchors. Weld mounting plate to curb steel and back plate of PowerStop with a continuous 1/4″ fillet weld. Anchor back plate of PowerStop to dock face with a minimum or (4) 3/4″ x 5 1/4″ wedge anchors (Kit#2103-0003).

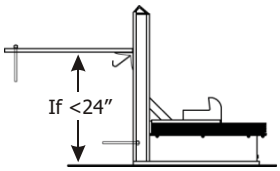

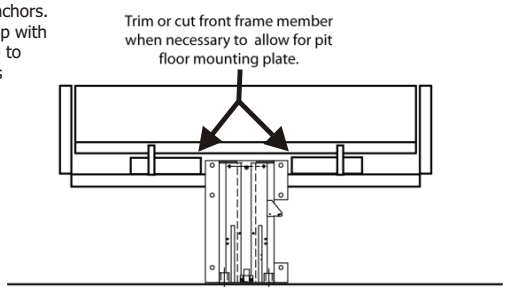

Cantilevered Dock (For bumper projection >4” or cantilevered dock or Edge-of-Dock leveler)

To determine size offset required, take total effective bumper projection (bumper size plus any cantilever) and subtract 4″.

Offset Formula			
Dim. A Bumper Projection	**Dim. B** Cantelever		**Offset**
4"	+ Dim B	-4"	= Offset
6"	+ Dim B		
10"	+ Dim B		
15"	+ Dim B		

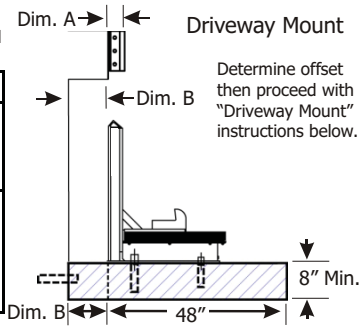

Driveway Mount

Determine offset then proceed with “Driveway Mount” instructions below.

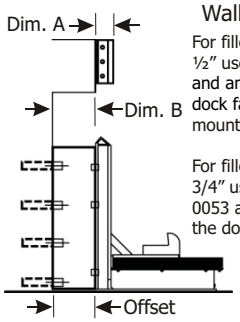

Wall Mount

For filler requirements from 1 ½″to 7 ½″ use cantilever bracket #9414-0052 and anchor cantilever bracket to the dock face or weld to embedded mounting plate (Part #7953-0119)

For filler requirements for 8 3/4″ to 13 3/4″ use cantilever bracket #9414-0053 and anchor cantilever bracket to the dock face (3/4″ Dia. X 5 1/4″ min.) (Kit #2103-0004) or weld to embedded mounting plate (Part #9414-0052).

Driveway Mount (Recommended when dock face is unsuitable for PowerStop Mounting)

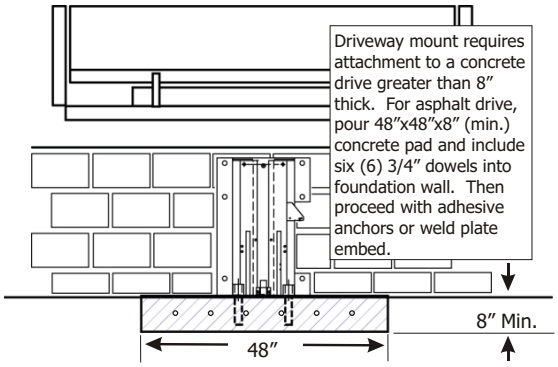

Driveway mount requires attachment to a concrete drive greater than 8″ thick. For asphalt drive, pour 48″x48″x8″ (min.) concrete pad and include six (6) 3/4″ dowels into foundation wall. Then proceed with adhesive anchors or weld plate embed.

Adhesive Anchors Method

(Kit #9414-0058)

Install two (2) 1″ Dia. adhesive anchors into 1-1/8″ Dia. x 7″ deep hole at rear of PowerStop.

Install two (2) 3/4″ Dia. x 5 1/4″ min. wedge anchor at front of PowerStop.

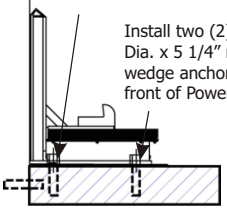

Drive Embed Method

Weld method

Properly locate and level the drive embed weld plate (Part#7953-0059) in the drive approach. Observe Cantilever conditions for proper positioning. Weld restraint to embed plate with a continuous ¼″ filet weld.

Bolt on Method

Properly locate and level the drive embed plate (Part#9414-0057) in the drive approach. Observe cantilever conditions for proper positioning. Using the bolts included, bolt the restraint to the embed plate.

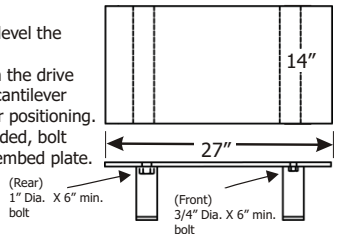

INSTALLATION DETAILS-MECHANICAL Stop-Tite

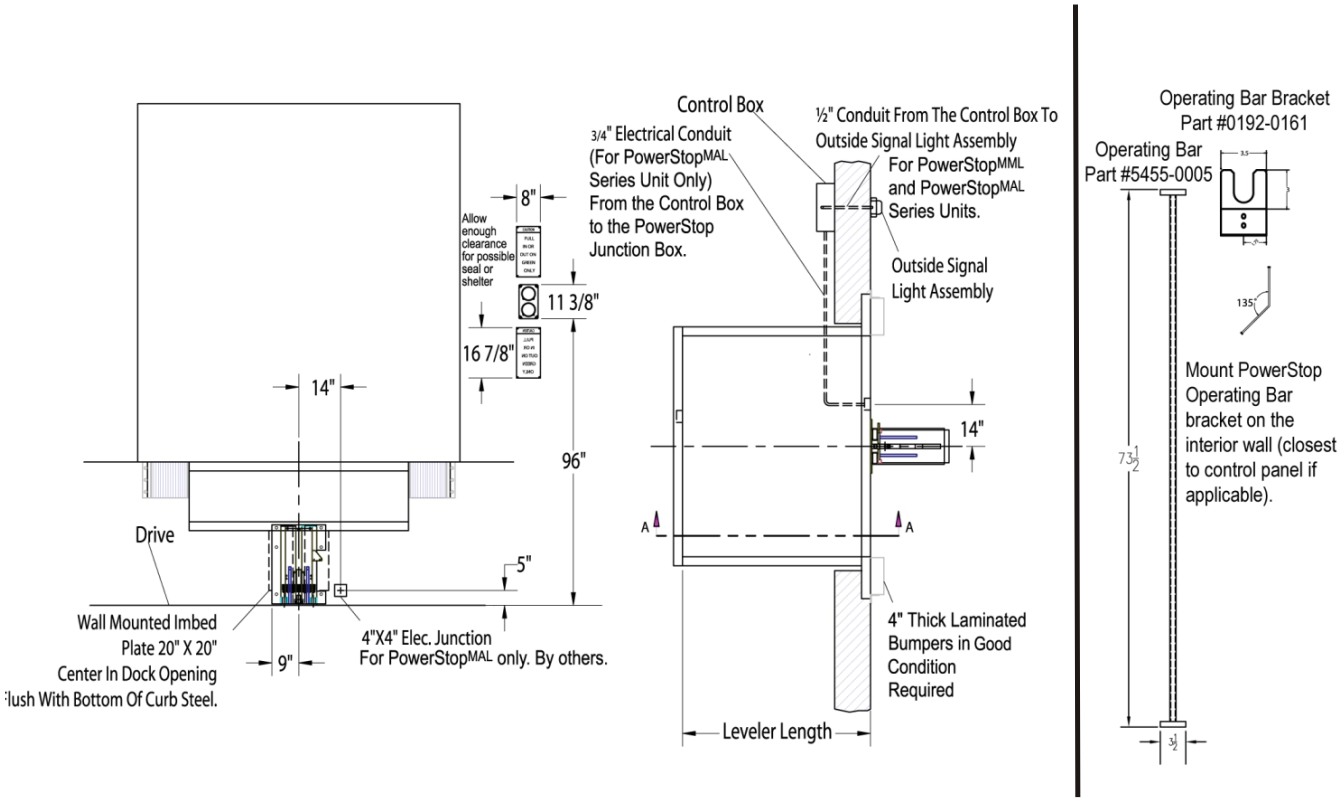

Optional DockAlert Communication System

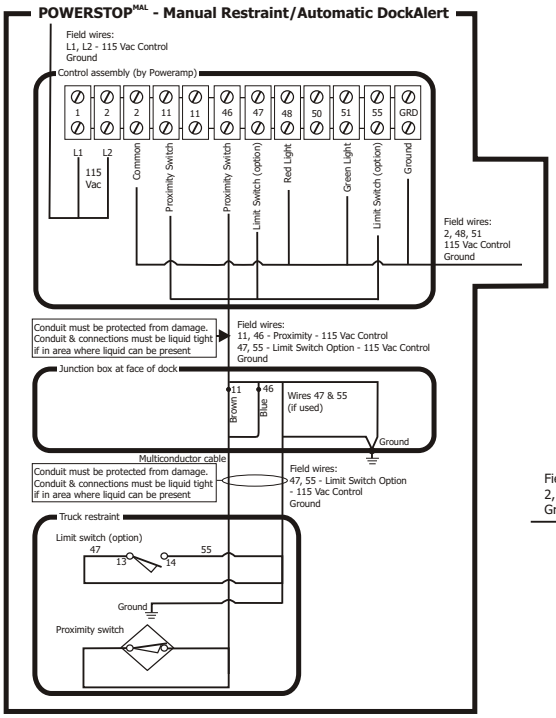

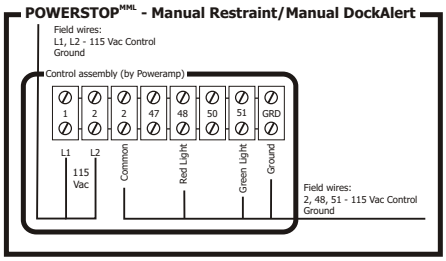

Outside signal light assembly by Poweramp included with optional DockAlert Communciation Systems

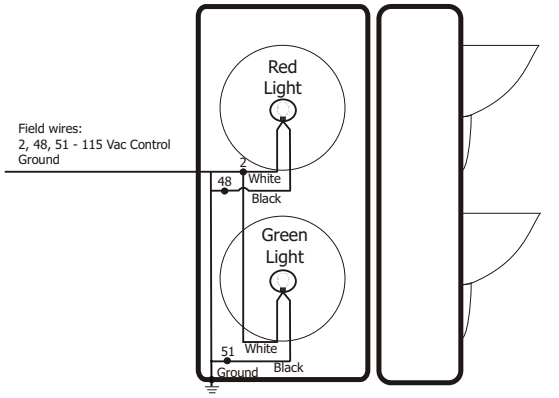

Concrete Dock Face (Standard installation)

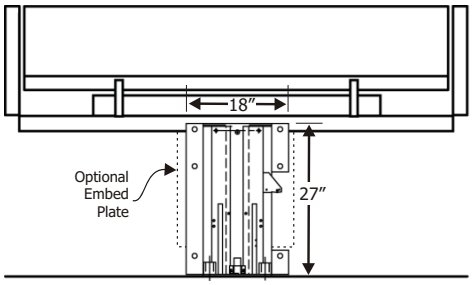

Wedge Anchors Method

Using back plate as a guide, drill six (6) holes for wedge anchors (3/4″x 5 1/4″ min.) (Kit #2103-0003)

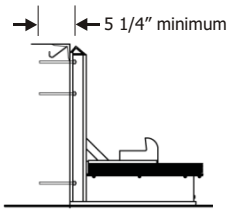

Wall Embed Method

Weld three sides of PowerStop back plate to the optional embed mounting plate (Part #7953-0119) with ten (10) 4″ long 1/4″ fillet welds.

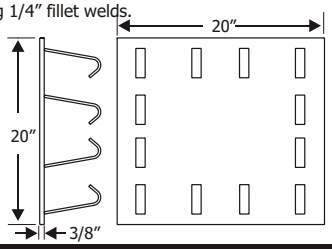

Low Pit Floor (Distance from pit floor to drive under 24”)

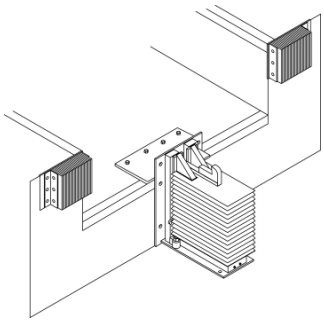

Anchor pit floor mounting plate (minimum 3/8″ x 20″W x 8″ D) (Part #9414-0056) with four (4) (3/4″x 5 1/4″ min.) wedge anchors. Weld mounting plate to curb steel and back plate of PowerStop with a continuous 1/4″ fillet weld. Anchor back plate of PowerStop to dock face with a minimum or (4) 3/4″ x 5 1/4″ wedge anchors (Kit#2103-0003).

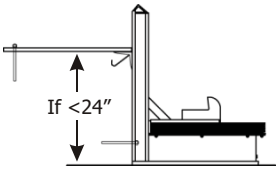

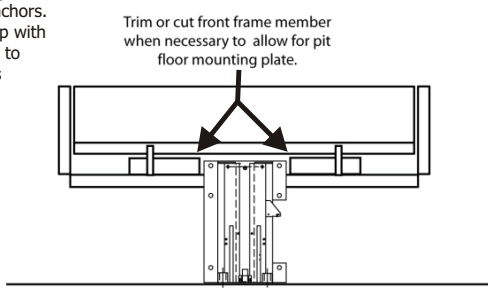

Cantilevered Dock (For bumper projection >4” or cantilevered dock or Edge-of-Dock leveler)

To determine size offset required, take total effective bumper projection (bumper size plus any cantilever) and subtract 4″.

Offset Formula			
Dim. A Bumper Projection	**Dim. B** Cantelever		**Offset**
4"	+ Dim B	-4"	= Offset
6"	+ Dim B		
10"	+ Dim B		
15"	+ Dim B		

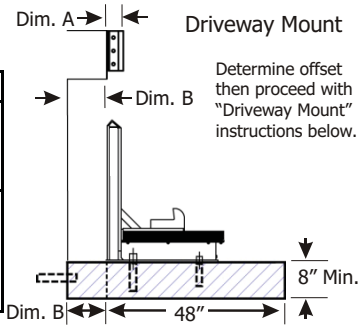

Driveway Mount

Determine offset then proceed with “Driveway Mount” instructions below.

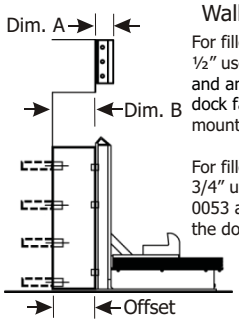

Wall Mount

For filler requirements from 1 ½″to 7 ½″ use cantilever bracket #9414-0052 and anchor cantilever bracket to the dock face or weld to embedded mounting plate (Part #7953-0119)

For filler requirements for 8 3/4″ to 13 3/4″ use cantilever bracket #9414-0053 and anchor cantilever bracket to the dock face (3/4″ Dia. X 5 1/4″ min.) (Kit #2103-0004) or weld to embedded mounting plate (Part #9414-0052).

Driveway Mount (Recommended when dock face is unsuitable for PowerStop Mounting)

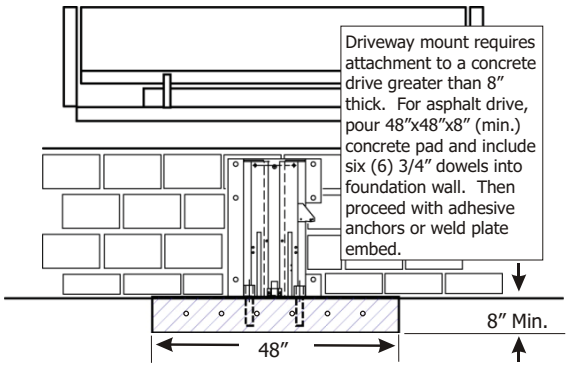

Driveway mount requires attachment to a concrete drive greater than 8″ thick. For asphalt drive, pour 48″x48″x8″ (min.) concrete pad and include six (6) 3/4″ dowels into foundation wall. Then proceed with adhesive anchors or weld plate embed.

Adhesive Anchors Method

(Kit #9414-0058)

Install two (2) 1″ Dia. adhesive anchors into 1-1/8″ Dia. x 7″ deep hole at rear of PowerStop.

Install two (2) 3/4″ Dia. x 5 1/4″ min. wedge anchor at front of PowerStop.

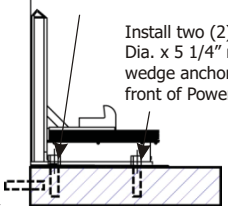

Drive Embed Method

Weld method

Properly locate and level the drive embed weld plate (Part#7953-0059) in the drive approach. Observe Cantilever conditions for proper positioning. Weld restraint to embed plate with a continuous ¼″ filet weld.

Bolt on Method

Properly locate and level the drive embed plate (Part#9414-0057) in the drive approach. Observe cantilever conditions for proper positioning. Using the bolts included, bolt the restraint to the embed plate.

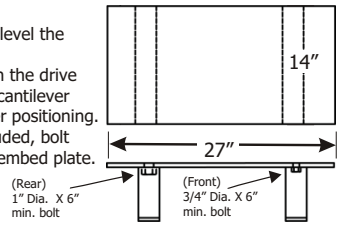

Install Control Panel and Wiring

WARNING

The electrical power must be OFF prior to electrical installation. For maximum protection, use an OSHA approved locking device to lock out all power sources. Only the person installing the equipment should have the key to unlock the power source.

Failure to follow these instructions may result in serious personal injury or death.

WARNING

DO NOT make any final electrical connections until all welding has been completed. Failure to do this may result in serious personal injury or death.

CAUTION

All electrical work — including the installation of the disconnect panel, control panel, and final connections — must be performed by a certified electrician and conform to all local and applicable national codes.

WARNING

If dock leveler is present. Always stand clear of platform lip when working in front of the dock leveler. Serious personal injury or death may result.

1. Mount the push button control panel (B) so bottom of control panel-to-dock floor distance (C) is 48 in. (1219.2 mm).

2. Install electrical disconnect panel (A) if not already installed. (Provided by others)

3. Install and connect the control wiring to the face of the building as shown in installation.

4. Connect the dock leveler power cable to the field wires in the pit junction box. Refer to the electrical drawings supplied with the dock leveler.

5. After all electrical connections in the vehicle restraint have been made, test the vehicle restraint function by following the instructions in the “Put New Stop-Tite Restraint Into Service” section on next page.

Coordinate powerpack location and hose Stop-Tite Overview

Dock Face
Appropriate location when the likelihood of flooding, snow removal and damage from trailer/trucks is minimal.

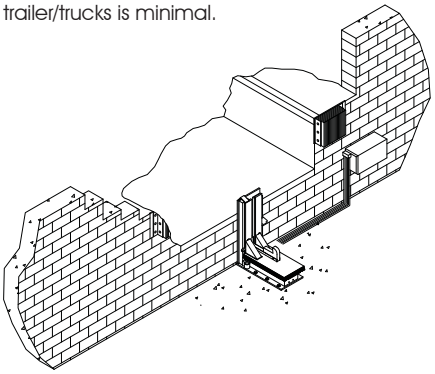

Under The Dock Leveler
When under the dock location is used, make certain to locate the powerpack where leveler will not interfere in below dock conditions. The routing of hydraulic and electrical lines from the powerpack to the restraint are best placed through min. 3” PVC (hydraulic) and 3/4” conduit (electricl) chase during pit construction.

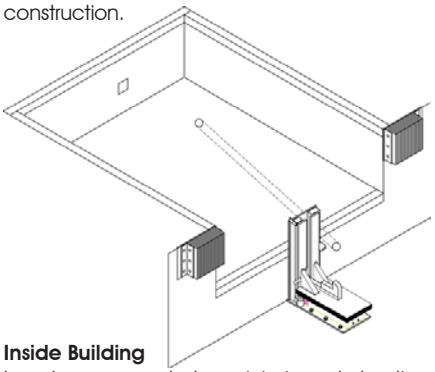

Inside Building
Locate powerpck to minimize obstruction potential. Hydraulic and electrical lines from the Powerpack to the restraint are best placed through min. 3” PVC (hydraulic) and 3/4” (electrical) chase during pit construction.

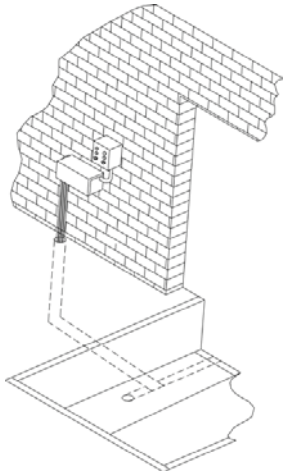

Operating Instructions

DANGER

Stay clear of dock leveler and vehicle restraint when freight carrier is entering or leaving dock area.

DO NOT move or use the dock leveler if anyone is under or in front of leveler.

Keep hands and feet clear of pinch points. Avoid putting any part of your body near moving parts.

Failure to follow these instructions may result in severe personal injury or death.

WARNING

Only trained personnel should operate the dock leveler and vehicle restraint.

DO NOT use a broken or damaged dock leveler or vehicle restraint. Make sure proper service and maintenance procedures have been performed on leveler before using.

Transport vehicle wheels must be chocked unless the vehicle restraint is used. Never remove the wheel chocks until loading/unloading is finished and transport driver has been given permission to leave.

Make sure platform lip rests on the transport vehicle's bed with at least 4 in. (102 mm) of overlap.

Maintain a safe distance from side edges of leveler during the loading/unloading process.

Failure to follow these instructions may result in serious personal injury or death.

WARNING

Once the Stop-Tite vehicle restraint has been activated, the dock attendant must visually inspect to assure that the restraint hook has properly engaged the ICC (RIG) bar. Serious personal injury or death may result.

Proper engagement occurs when the hook is able to travel vertically, contacting the bottom edge of the horizontal member of the ICC bar (RIG), without obstruction.

1. Disconnect the external lifting device and lifting brackets.

2. Remove latch shipping bolt from latch mechanism on both manual and hydraulic models. This prevents Stop-Tite from raising.

3. Turn the main electrical power ON (Hydraulic Only).

4. Raise the Stop-Tite restraint fully by pushing and holding the ENGAGE button on Automatic/ Hydraulic units or pulling latch release with the handle provided on the Mechanical Stop-Tite.

NOTE: The restraint weldment should raise to the top of the track, contacting the track stop.

NOTE: Stop-Tites equipped with Automatic Lights should have a Green light inside and Red light outside when raised unless equipped with optional upper limit switch. A visible or audible alarm will signal the restraint weldment has reached the top of the track and may not have properly engaged the ICC bumper, if present.

5. Lower the Stop-Tite restraint fully by pushing and holding the RELEASE button. The restraint weldment should lower fully until the latch release is engaged.

NOTE: Stop-Tites equipped with Automatic Lights should have a Red light inside and green light outside when the restraint weldment is stored.

6. If Stop-Tite restraint cannot properly restraint the vehicle due to missing or defective ICC (RIG) bar advise driver of the transport vehicle and dock personnel. The transport vehicle must be secured against movement by other methods. For levelers interlocked with the restraint, turn the selector switch to Bypass to allow use of the dock leveler and proper light changes inside and outside the building (where equipped with lights).

Troubleshooting

⚠ CAUTION

Discharge capacitor before attempting a capacitor test.

⚠ WARNING

Line side of fuse is always hot. Turn off main power supply before removing fuses. Attach proper lock-out / tag-out devices.

Symptom	Possible Cause	Solution
Restraint will not raise or lower.	Debris	Remove Bellows check for Debris jammed in scissor mechanism.
Restraint will not raise or lower Mechanical or Hydraulic	Lubrication	- Lubricate latch release leveler. - Lubricate pivot points scissors mechanism.
	Damaged parts	- Damaged or missing store spring. - Damaged of missing scissors springs. - Worn out or damaged flanged bearings in Scissors assemble. - Front slot on hook weldment bent up or down.
Restraint will not raise (Hydraulic only)	Lights on but Motor does not run	- Motor overload device tripped or fuse blown. *Note:* *When replacing fuse(s) or breakers , the new fuse or breaker must have the same specification as the old.*
	Wire Connections	Check all wire connection for damage corrosion.
	Prox switch	Prox switch failed or wired incorrectly.
Motor energizes but does not run.	Defective motor	Replace motor.
	Capacitor	-Capacitor shorted. -Capacitor wired incorrectly or bad connections.
	Voltage	Low line voltage check wire size to house power.
Motor energizes and runs but restraint will not raise or lower.	Low Hydraulic fluid	Check for leaking cylinders or hoses.
	Filter	The suction filter my be clogged.
	Coil	Coil must be energized for restraint to raise only. Coil energized to lower.
	Valve	Valve may be damaged.
Motor energizes and runs but restraint will not lower	Coil.	Coil should not be energized possible bad relay.
	Valve	Valve may be damaged.
	Interlock prox	Leveler may have interlock, see leveler specific manual.

IMPORTANT

Do not run motor when valves are removed from valve block.
Do not over tighten coil on valve: 15 inch lbs max which is just over finger tight.
Do not over tighten valve into block: 15 foot lbs max which is enough to compress the washer and prevent leakage.

IMPORTANT

Do not run motor when valves are removed from valve block.
Do not over tighten coil on valve: 15 inch lbs max which is just over finger tight.
Do not over tighten valve into block: 15 foot lbs max which is enough to compress the washer and prevent leakage.

Symptom	Possible Cause	Solution
Restraint move in one direction only.	Valve	The four way valve may be damaged or has trash in the valve.
	Coil	Check nut on coil may be over tightened and causing valve to bind up.
Lights don't change	Prox switch	Prox switch has two lights on switch. Green when metal is present on red when no metal is present.
Lights not flashing or not on	Flasher	- Flasher can fail closed (lights on steady no flash). - Flasher can fail open (lights will not be on).
	Bulbs	Check to make sure bulbs are not burned out.
Alarm on or caution light on.	Damaged over travel prox	Damaged or malfunctioning prox switch.

Periodic Maintenance

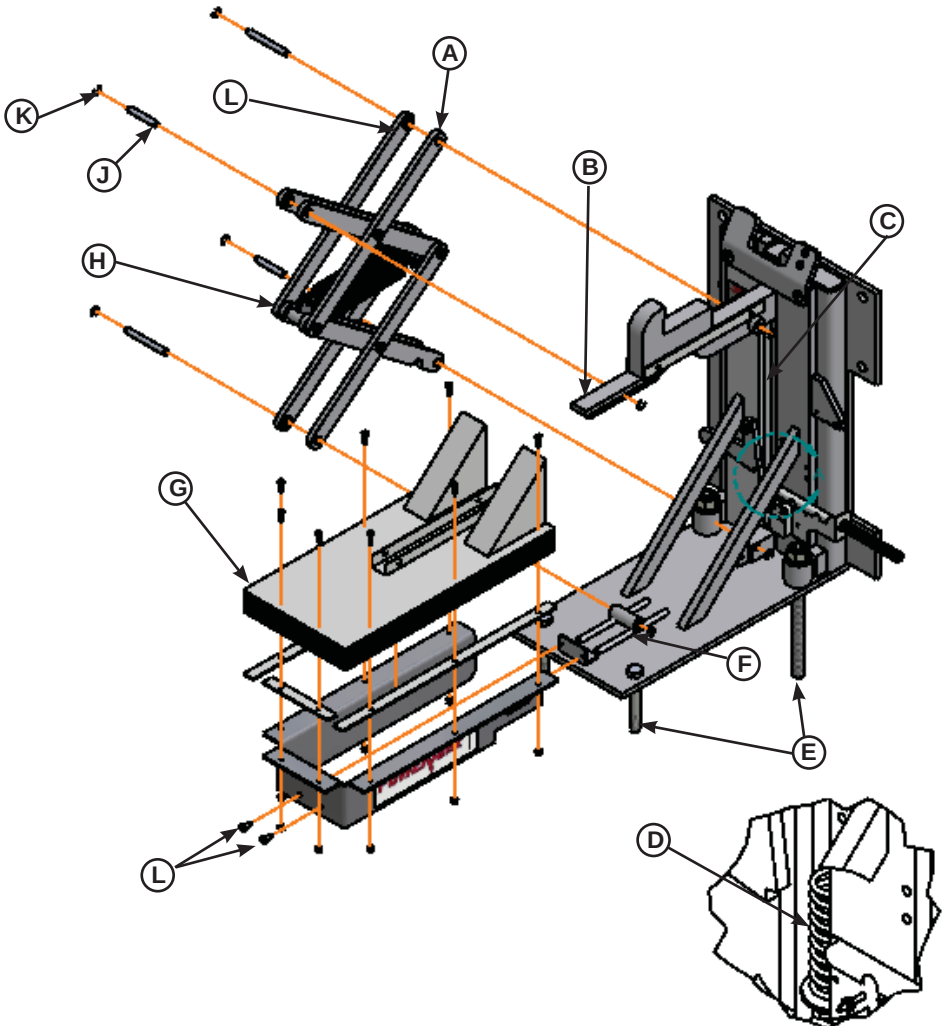

A— Scissors Assembly
B— Hook Weldment
C— Rear Vertical Track
D— Rear Track Assist Spring
E— Platform Hinge Area
F— Bottom Slide Track
G — Bellows
H— Main Springs
J— Pin
K— E-Clip
L —Bearing

⚠ WARNING

Before performing any maintenance under the dock leveler or vehicle restraint lock the electrical power source in OFF position using an approved locking device.

Failure to follow these instructions may result in serious personal injury or death.

IMPORTANT

Use of fluids that do not have equivalent specifications to those in the following list will result in abnormal operation of the dock leveler and voiding of warranty.

To ensure normal operation of the dock leveler and vehicle restraint, use only aircraft hydraulic fluid designed to meet or exceed military specification MIL-H-5606 G. It is recommended that the following hydraulic fluids be used:

- ULTRA-VIS-HVI-15
- Aero Shell Fluid 4 or Fluid 41
- Mobile Aero HFA Mil-HS606A or Aero HF
- Texaco Aircraft Hydraulic Oil 15 or 5606
- Exxon Univis J13

These fluid brands can be mixed together. Mixing with fluids that do not meet or exceed MIL-L-5606 may damage the equipment and WILL void warranty. Use of hydraulic fluids with equivalent specifications to those listed here are acceptable.

Daily Maintenance

- Daily clear any debris to prevent operation issues.
- Check inside and outside lights for proper operation

Weekly Maintenance

- Operate the vehicle restraint through the complete operating cycle to maintain lubrication of parts of both mechanical and hydraulic restraints.
- Inspect the rear vertical track area (C). The track area must be kept free of dirt and debris.

IMPORTANT
Failure to clean and properly lubricate the vehicle restraint will cause abnormal operation.

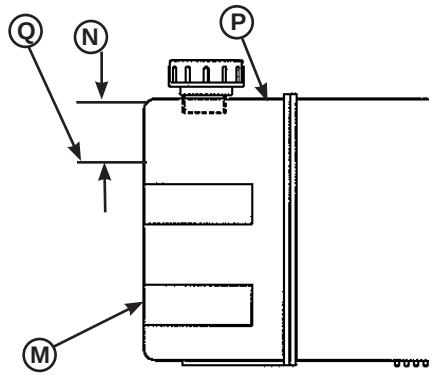

M — Reservoir
N —1 in. (25.5 mm) (From Top of Reservoir)
P — Breather Cap
Q — Fluid Level

Quarterly Maintenance

- Clear any debris to prevent operation issues.
- Check inside and outside lights for proper operation
- Operate the vehicle restraint through the complete operating cycle to maintain lubrication of parts of both mechanical and hydraulic restraints.
- Inspect the rear vertical track area (C). The track area must be kept free of dirt and debris.
- Clean and lubricate scissors assembly (A) and all pivot points.
- Make sure Rear Track Assist Spring (D) is properly seated at the bottom of the rear track.

Yearly Maintenance

- Repeat of Quarterly Maintenance.
- Change Hydraulic Oil (May be required earlier depending on conditions).

IMPORTANT
A low fluid level or the use of hydraulic fluids not equivalent to the fluid types recommended, will cause abnormal operation of the leveler and WILL void warranty.

- Check reservoir fluid level (Q):

1. Put the vehicle restraint in the stored position.
2. Turn OFF all electrical power to the vehicle restraint.
3. Wipe off plastic tank as needed (P).
4. Measure fluid level. The fluid level should be approximately 1 in. (25.5 mm) (N) from top of reservoir (M) with vehicle restraint stored.
5. Add hydraulic fluid if necessary. Use only recommended fluid. See previous page.
6. Install cover
7. Turn ON electrical power.

*Refer to OSHA regulation 1910.146
*Refer to OSHA regulation 1910.147.

Stop-Tite (Mechanical) Parts Breakdown

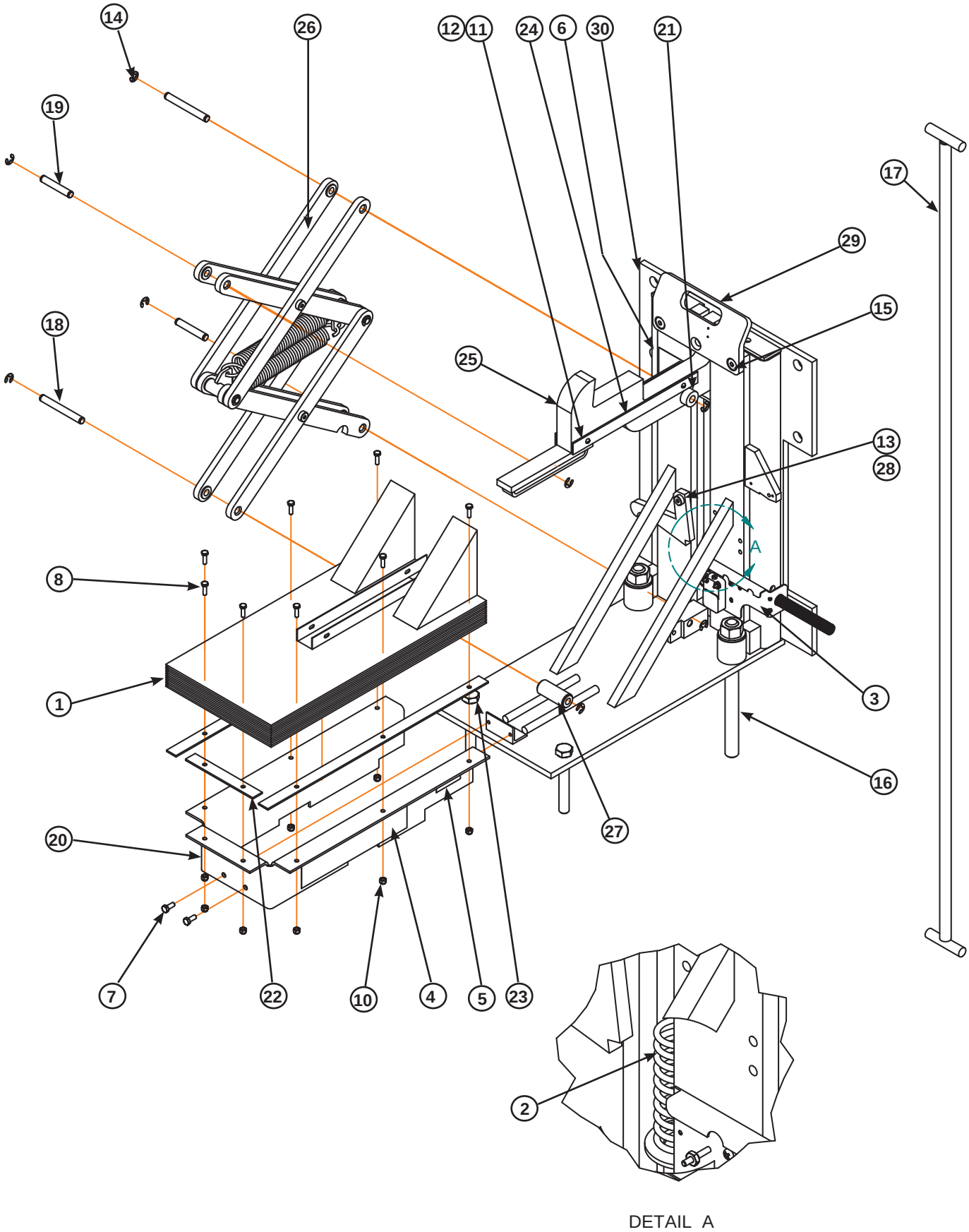

Stop-Tite M (Mechanical) Parts Breakdown

Item	Quantity	Part Number	Description
1	1	0191-0025	Bellows W/ 1 X 13=1/2 Velcro Strips
2	1	0941-0015	Spring, 1-7/8 DIA X 6.00
3	1	0615-0037	Stored Limit Switch with Bracket, NC
4	1	1751-0444	Decal-Systems, Inc./Powerstop, 3-3/4 X 14-1./2
5	1	1751-0010	Decal-Serial Number
6	1	1751-0135	Decal-Warning
7	2	2101-0009	HHCS-Grade 2-Zinc Plated, 5-16-18 UNC X 3/4
8	8	2101-0084	HHCS-Grade 5-Zinc Plated , 1/4-20 UNC X 3/4
9	1	2101-0085	Washer-Flat-Zinc Plated, 1-1/8 DIA
10	8	2101-0143	Nylon Lock Nut, 1/4-20 UNC
11	2	2101-0150	RHMS-Slotted, 10-24 UNC X 2-1/4
12	2	2101-0151	Nylon Lock Nut, #10-24 UNC
13	1	2101-0165	Shoulder Bolt,1/2 DIA X 5/8
14	8	2101-0189	E-Clip, 1/2
15	2	2101-0212	Flat Head Cap Screw, 1/2-13 UNC X 1
16	1	2103-0006	Anchor Kit Drive Way Mount
		2103-0003	Anchor Kit Wall Mount
17	1	5455-0005	Level Weldment - Release
18	2	9202-0042	Pin-Pivot-Long, 1/2 DIA
19	2	9202-0043	Pin-Pivot-Short, 1/2 DIA
20	1	9411-0028	Shroud-Bellows Mounting - Pstop
21	2	9412-0161	Tube, 1-1/4 OD X 9-16 ID X 5/8
22	1	9412-0201	Bar-Bellows Mounting-Front
23	2	9412-0202	Bar-Bellows Mounting-Side
24	2	9412-0215	Bar-Bellows Mounting
25	1	9413-0055	Restraint Weldment - Low Profile
		9413-0049	Restraint Weldment - Two Step Profile (Shown)
26	1	9413-0062	Scissor Lift Sub - Assembly - Pstop.
27	1	9413-0068	Spacer Assembly - Pstop Mechanical
28	1	9413-0070	Release Lever Assembly - Pstop Mechanical
29	1	9413-0120	Lip Deflector / Hook Stop (Will NOT Work with Barrel Style Prox)
30	1	9414-0046	Final Base Weldment - 27”
31	1	9413-0538	Prox Over Travel (Flat Style)
32		9415-0061	Prox Over Travel, Includes Hardware and Lip Deflector (Flat Style)

Barrel Prox no longer available replace with 9415-0061 Conversion Kit

Stop-Tite A (Hydraulic) Parts Breakdown

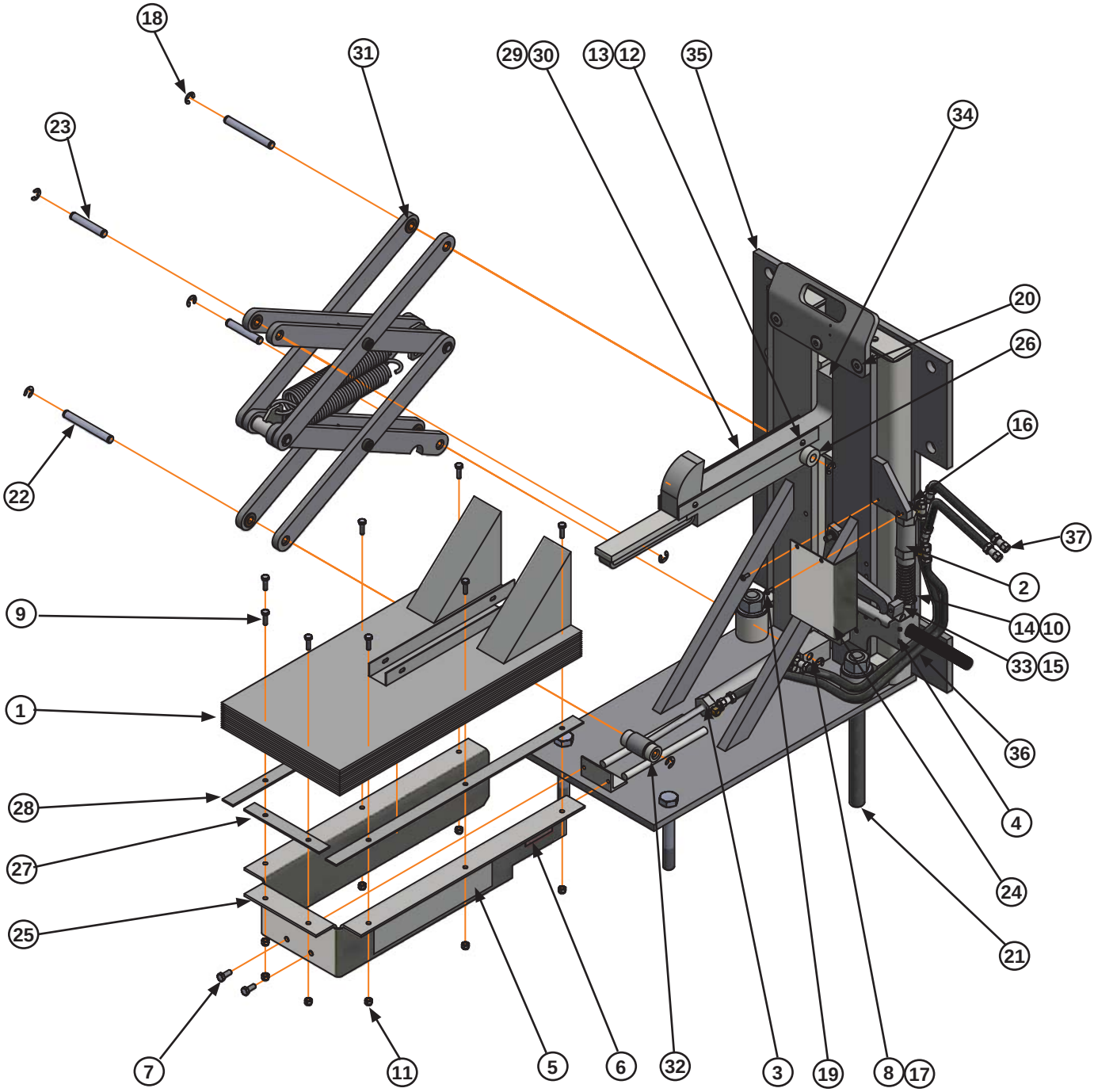

Stop-Tite A (Hydraulic) Parts Breakdown

Item	Quantity	Part Number	Description
1	1	0191-0025	Bellows W/ 1 X 13=1/2 Velcro Strips
2	1	0524-0063	HYD Cylinder ASM, 1” Stroke
3	1	0524-0064	HYD Cylinder ASM, 5-3/4” Stroke
4	1	0615-0037	Stored Limit Switch with Bracket, NC
5	1	1751-0444	Decal-Systems, Inc./Powerstop, 3-3/4 X 14-1./2
6	1	1751-0010	Decal-Serial Number
7	2	2101-0009	HHCS - Grade 2 - Zinc Plated, 5/16-18 UNC X 3/4
8	1	2101-0039	Nylon Lock Nut,5/16-18 UNC
9	8	2101-0084	HHCS - Grade 5 - Zinc Plated, 1/4-20 UNC X 7/8
10	1	2101-0098	HHCS - Grade 5 - Zinc Plated, 5/16-18 UNC X 1-3/4
11	8	2101-0143	Nylon Lock Nut, 1/4-20 UNC
12	2	2101-0150	RHMS - Slotted, 10-24 UNC X 2-1/4
13	2	2101-0151	Nylon Lock Nut, #10-24 UNC
14	1	2101-0163	Washer-Flat-Zinc Plated, 1/2 DIA X 5/8
15	1	2101-0165	Shoulder Bolt, 1/2 DIA X 5/8
16	1	2101-0187	HHCS - Grade 5, 5/16-18 UNC X 1
17	1	2101-0188	HHCS - Grade 5, 5/16-18 UNC X 1-1/4
18	8	2101-0189	E-Clip, 1/2”
19	2	2101-0202	RHMS - Phillips, 10-32 UNF X 1-3/4
20	2	2101-0212	Flat Head Cap Screw, 1/2-13 UNC X 1
21	1	2103-0006	Anchor Kit Drive Way Mount
		2101-0003	Anchor Kit Wall Mount
22	2	9202-0042	Pin Pivot Long, 1/2 DIA
23	2	9202-0043	Pin Pivot Short, 1/2 DIA
24	1	9411-0024	Shroud-Cylinder, 1/16 X 2-1/16 X 4-1/2 X 6
25	1	9411-0028	Shroud-Bellows Mounting - Pstop
26	2	9412-0161	Tube, 1-1/4 OD X 9/16 ID X 5/8
27	1	9412-0201	Bar-Bellows Mounting-Front, Painted - 1/8 X 1 X 7
28	2	9412-0202	Bar-Bellows Mounting-Side, Painted - 1/8 X 1 X 23
29	2	9412-0215	Bar Bellows mounting, Painted - 1/8 X 1 X 13
30	1	9413-0055	Restraint Weldment - Low Profile (Shown)
		9413-0049	Restraint Weldment - Two Step Profile
31	1	9413-0062	Scissor Lift Sub-Assembly - Pstop
32	2	9413-0069	Spacer Assembly - PStop-A
33	1	9413-0071	Release Lever Assembly
34	1	9413-0120	Lip Deflector / Hook Stop (Will NOT Work with Barrel Style Prox)
35	1	9414-0046	Final Base Weldment - 27”
36	1	9904-0097	Hydraulic Hose ASM-1/4” 100R1 X 24”, #4 JICF Swivel Both Ends
37	1	9904-0119	Hydraulic Hose, 1/4” 100R1 X 96”, #4 JICF Swivel Both Ends
38	1	0522-0002	Spring, Helper, Rear Frame
39	1	9413-0538	Prox Over Travel (Flat Style)
40		9415-0061	Prox Over Travel, Includes Hardware and Lip Deflector (Flat Style)

Barrel Prox no longer available replace with 9415-0061 Conversion Kit

Stop-Tite Scissor Breakdown

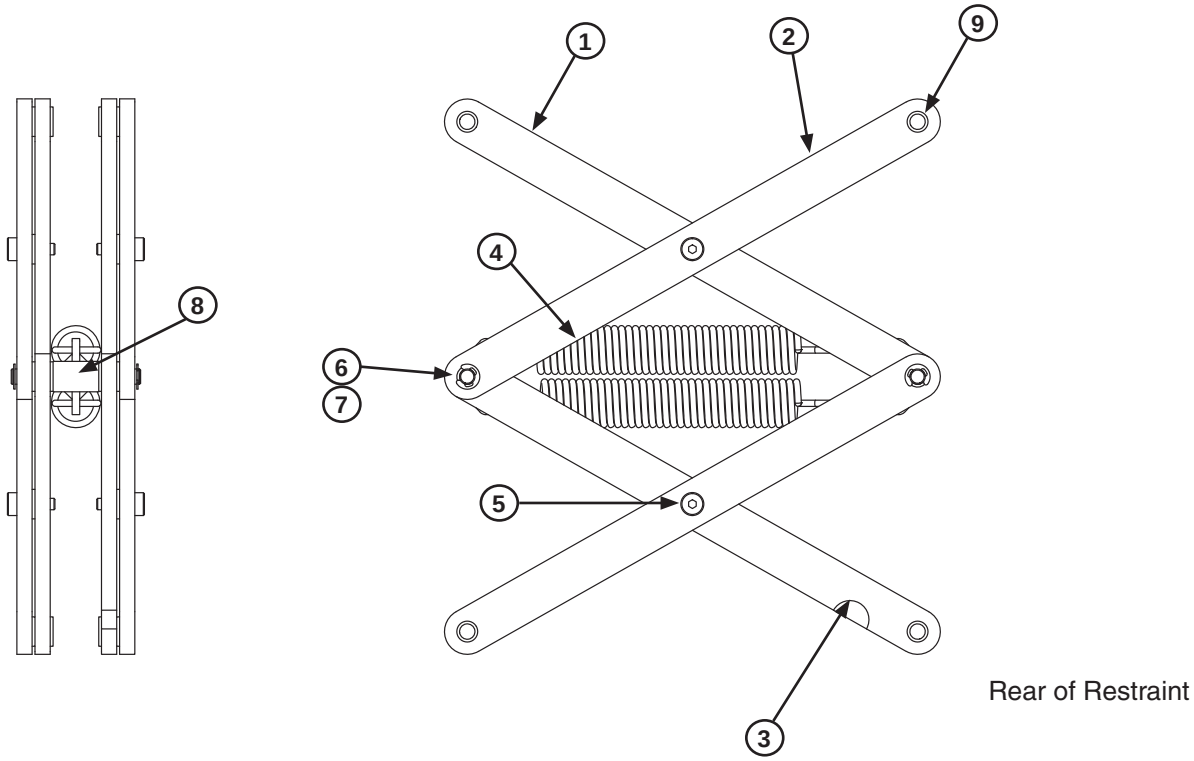

Item	Quantity	Part Number	Description
1	3	9413-0063	Bar Assembly - Tapped W/Bushings
2	4	9413-0064	Bar Assembly - W/Bushing
3	1	9413-0065	Bar Assembly - Notched
4	2	0941-0011	Spring Extension
5	4	2101-0165	Socket Head Shoulder Bolt
6	4	2101-0189	E-Clip
7	2	9202-0042	Pin - Long
8	2	9413-0044	Spring Plate Weldment
9	16	9461-0006	Flanged Bearings
	1	9413-0062	Scissor Lift Subassembly

This page was intentionally left blank

Power Pack Assembly

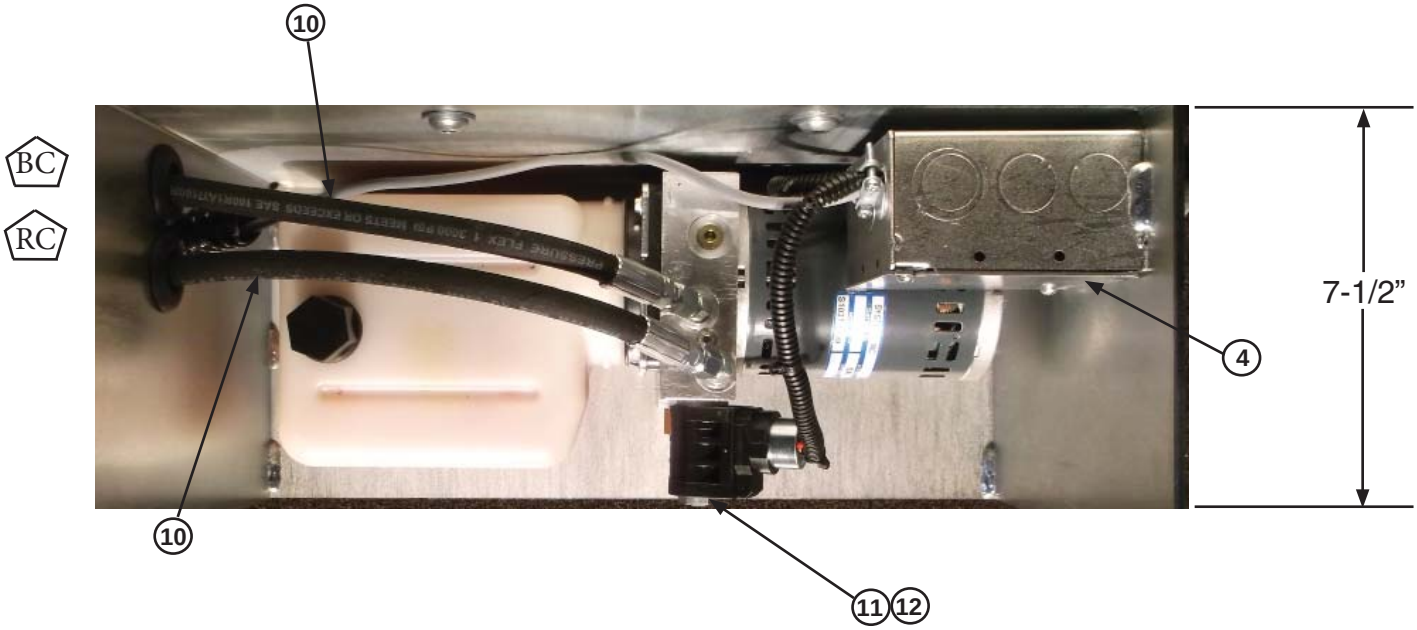

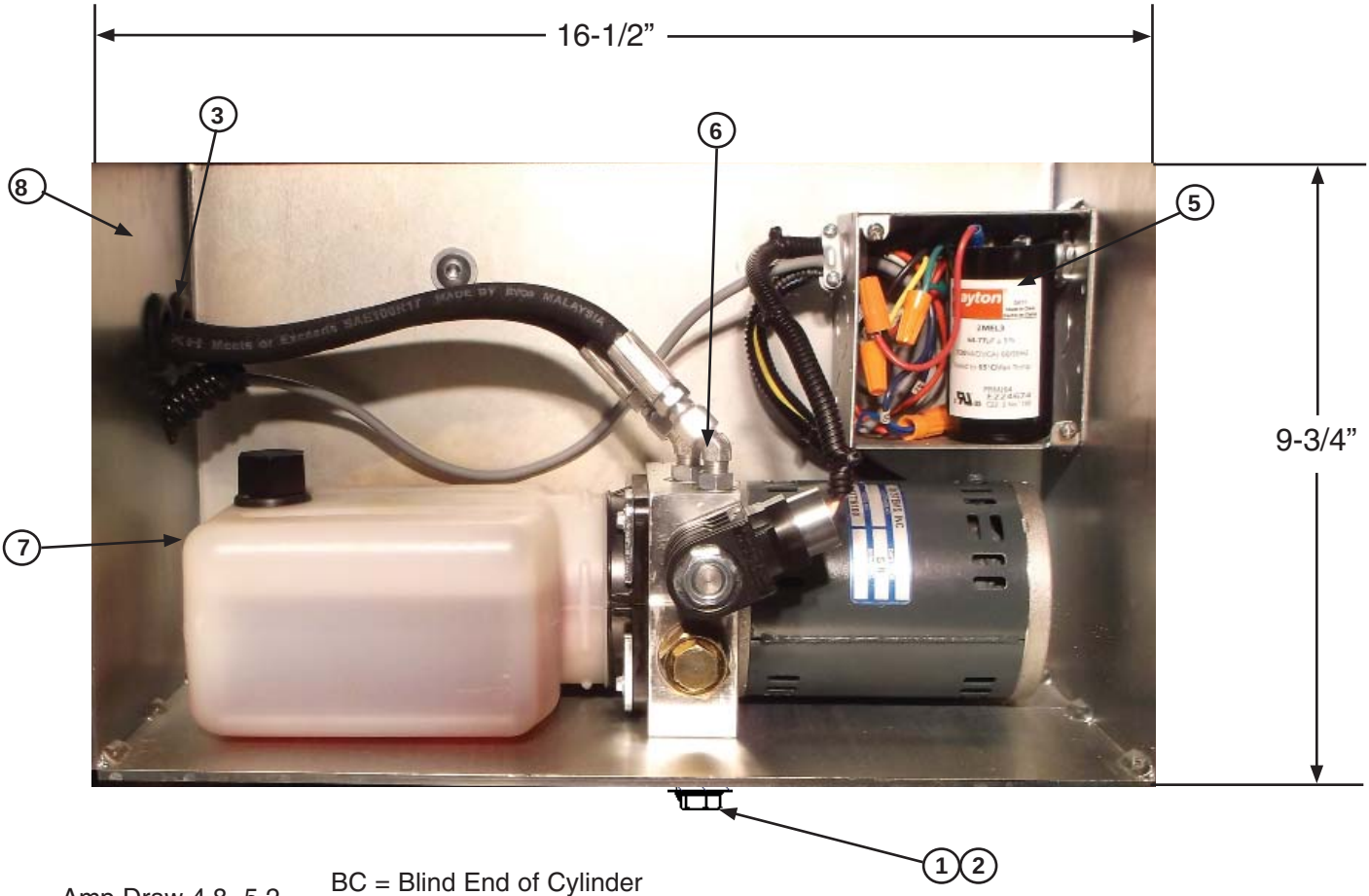

Amp Draw 4.8- 5.2

BC = Blind End of Cylinder
RC = Rod End of Cylinder

Power Pack Assembly

Item	Quantity	Part Number	Description
1	2	2101-0017	HHCS-Grad 2-Zinc Plated, 3/8-16 UNC X 1
2	2	2101-0140	Lock Washer, 3/8
3	2	2401-0001	Grommet, 1-3/8 OD X 3/4 ID
4	1	2751-0016	J-Box Cover, 4 X 4
5	1	3051-0058	Capacitor-Motor Start, 66-77mf-330V
6	1	9301-0221	Fitting Connector 45 Deg, #4 ORB #4 JIC
7	1	9391-0040	Powerppac-PStop, 1PH-115V-1/4HP-1GPM
8	1	9391-0012	Powerppac Mounting Weldment
9	1	9391-0013	Cover-Pstop
10	REF	9904-0119	Hydraulic Hose ASM-1/4” 100R17 X 96, #4 JICF Swivel Both Ends
11	1	8581-0117	Valve, 4 Way
12	1	8581-0118	Delta Coil 115 volt (P Stop Only)
13	1	1751-0149	Decal “ No Step” (On Top of Cover)
*			Hose Lengths Vary by Job
14	1	9395-0092	Powerpac (Includes Valve Body, Cover) complete

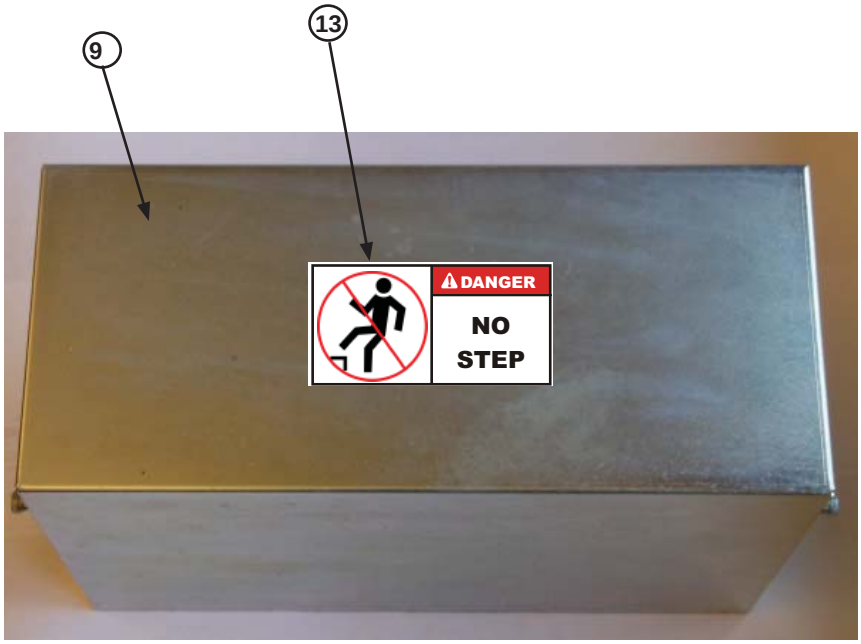

Electrical Control Box

BILL OF MATERIAL			
LEGEND	QTY	PART NUMBER	DESCRIPTION
ENCL	1	SEE TABLE 1	ENCLOSURE
PNL	1	SEE TABLE 1	PANEL
TB1	15	1431-0324	TERMINAL BLOCK [d]
	1	1431-0327	TERM BLOCK JUMPER, 3 POLE
	1	1431-0326	TERM BLOCK JUMPER, 2 POLE
	1	1431-0335	TERM BLOCK, GROUNDING [d]
	1	1431-0336	TERM BLOCK END
	1	1431-0325	TERM BLOCK END
	2	1431-0328	TERM BLOCK CLAMP
	8.5"	3051-0032	TERM BLOCK CHANNEL
CB1	1	5101-0151	CIRCUIT BREAKER
MR1	1	7141-0132	MOTOR RELAY
OL1	1	7141-0130	OVERLOAD RELAY
TU1	1	7141-0142	THERMAL UNIT
FL1	1	7141-0058	FLASHER
SOC1	1	7141-0074	RELAY SOCKET
CR1	1	7141-0073	RELAY
PB1	1	0961-0285	PUSH BUTTON (IF NOT N4X FGLASS)
		0961-0334	PUSH BUTTON (IF N4X FGLASS)
PB2	1	0961-0286	PUSH BUTTON (IF NOT N4X FGLASS)
		0961-0335	PUSH BUTTON (IF N4X FGLASS)
SS1	1	0961-0300	SELECTOR SWITCH (IF NOT N4X FGLASS)
		0961-0305	KEY SWITCH (IF NOT N4X FGLASS)
		0961-0346	SELECTOR SWITCH (IF N4X FGLASS)
		0961-0351	KEY SWITCH (IF N4X FGLASS)
KB1	1	0961-0295	MTG BASE W/ CONTACT BLOCK (IF NOT N4X FGLASS)
		0961-0343	MTG BASE W/ CONTACT BLOCK (IF N4X FGLASS)
KB2	1	0961-0293	MTG BASE W/ CONTACT BLOCK (IF NOT N4X FGLASS)
		0961-0341	MTG BASE W/ CONTACT BLOCK (IF N4X FGLASS)
KB3	1	0961-0297	MTG BASE W/ CONTACT BLOCKS (IF NOT N4X FGLASS)
		0961-0345	MTG BASE W/ CONTACT BLOCKS (IF N4X FGLASS)
LT1,2	2	0961-0311	LIGHT MODULE (IF NOT N4X FGLASS)
		0961-0369	LIGHT MODULE (IF N4X FGLASS)
	2	3051-0059	LAMP
LT1	1	0961-0314	LENS (IF NOT N4X FGLASS)
		0961-0372	LENS (IF N4X FGLASS)
LT2	1	0961-0312	LENS (IF NOT N4X FGLASS)
		0961-0370	LENS (IF N4X FGLASS)
-----	1	1751-0412	DECAL - PS - PR - ENGLISH
		1751-0413	DECAL - PS - FRENCH
		1751-0414	DECAL - PS - SPANISH
		1751-0689	DECAL - PS - DLM - ENGLISH
		1751-0604	DECAL - ST - ENGLISH
		1751-0605	DECAL - ST - FRENCH
		1751-0606	DECAL - ST - SPANISH
-----	4	1751-0163	LABEL [a]
-----	1	------	STICKER - THERMAL UNIT [e]

[a] COMPLETE LABEL AS SHOWN BELOW. AFFIX TO INSIDE OF DOOR.

DWG 9-K0-800-A-E
115 VOLTS
1 PHASE
60 HZ
[b] TOTAL FLA (MAXIMUM)
4.6 MOTOR FLA (LARGEST MOTOR)
0.25 MOTOR HP (LARGEST MOTOR)
ENCLOSURE TYPE [c]
SHORT CIRCUIT CURRENT
5 KA RMS SYMMETRICAL,
120 V MAXIMUM

[b] SEE TABLE 2
[c] USE ENCLOSURE MFGR'S RATING.

[d] AFFIX APPROPRIATE LABEL NEXT TO COMPONENT
[e] AFFIX TO SIDE OF ENCLOSURE WALL NEAR OVERLOAD RELAY.

BILL OF MATERIAL			
LEGEND	QTY	PART NUMBER	DESCRIPTION
OPTIONAL BILL OF MATERIAL - AUDIBLE ALARM			
TB1	3	1431-0324	TERMINAL BLOCK (47,55,56) [f]
	1	1431-0326	TERM BLOCK JUMPER
SOC2	1	7141-0042	RELAY SOCKET [g]
CR2	1	7141-0062	RELAY [g]
ALM1	1	3051-0112	ALARM
OPTIONAL BILL OF MATERIAL - VISUAL ALARM			
TB1	3	1431-0324	TERMINAL BLOCK (47,55,56) [f]
	1	1431-0326	TERM BLOCK JUMPER
SOC2	1	7141-0042	RELAY SOCKET [g]
CR2	1	7141-0062	RELAY [g]
LT5	1	0961-0311	LIGHT MODULE (IF NOT N4X FGLASS)
		0961-0369	LIGHT MODULE (IF N4X FGLASS)
	1	0961-0313	LENS (IF NOT N4X FGLASS)
		0961-0371	LENS (IF N4X FGLASS)
	1	3051-0059	LAMP
----	1	1751-0424	DECAL - ENGLISH
		1751-0425	DECAL - FRENCH
		1751-0426	DECAL - SPANISH
OPTIONAL BILL OF MATERIAL - LED LIGHTS			
LT1	1	0961-0318	LIGHT MODULE (IF NOT N4X FGLASS)
		0961-0376	LIGHT MODULE (IF N4X FGLASS)
	1	0961-0322	LENS (IF NOT N4X FGLASS)
		0961-0380	LENS (IF N4X FGLASS)
LT2	1	0961-0316	LIGHT MODULE (IF NOT N4X FGLASS)
		0961-0374	LIGHT MODULE (IF N4X FGLASS)
	1	0961-0320	LENS (IF NOT N4X FGLASS)
		0961-0378	LENS (IF N4X FGLASS)
LT5	1	0961-0317	LIGHT MODULE (IF NOT N4X FGLASS)
		0961-0375	LIGHT MODULE (IF N4X FGLASS)
	1	0961-0321	LENS (IF NOT N4X FGLASS)
		0961-0379	LENS (IF N4X FGLASS)

[f] DO NOT DUPLICATE TERMINAL BLOCKS 47, 55 & 56. ONLY ONE TERMINAL BLOCK 47, ONE TERMINAL BLOCK 55 & ONE TERMINAL BLOCK 56 ARE REQUIRED IF UNIT HAS ANY COMBINATION OF AUDIBLE ALARM & VISUAL ALARM.

[g] DO NOT DUPLICATE RELAY SOCKET & RELAY. ONLY ONE SOCKET & ONE RELAY ARE REQUIRED IF UNIT HAS ANY COMBINATION OF AUDIBLE ALARM & VISUAL ALARM.

DOOR - AS VIEWED FROM INSIDE WITH DOOR OPEN.
EXACT LOCATION OF COMPONENTS MAY BE DIFFERENT THAN WHAT IS SHOWN.

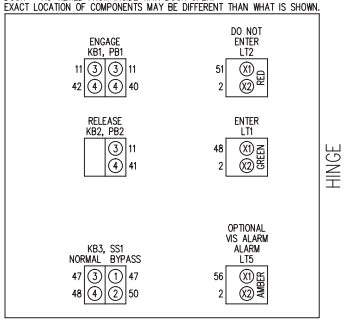

PANEL - EXACT LOCATION OF COMPONENTS MAY BE DIFFERENT THAN WHAT IS SHOWN.
BOLD LINES INDICATE FIELD WIRING.

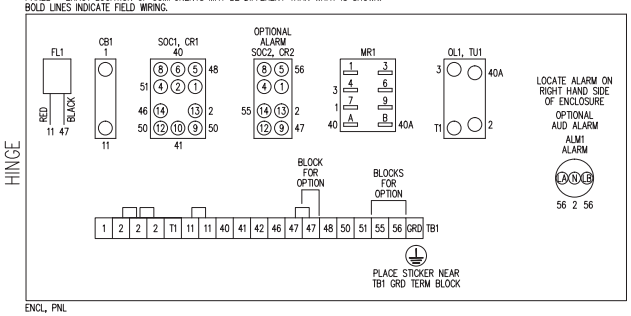

ENCL, PNL

WIRE CHART			
WIRE			
NO	COLOR	SIZE	LOCATIONS
1	BLACK	14 AWG	TB1, MR1-7
1	RED	14 AWG	TB1, CB1
3	BLACK	14 AWG	MR1-4, OL1
T1	BLACK	14 AWG	TB1, OL1
2	WHITE	16-18 AWG	TB1, SOC1-13, OL1, LT1-X2, LT2-X2
11	RED	14 AWG	TB1, CB1
11	RED	16-18 AWG	TB1, FL1-RED, KB1-3, KB1-3, KB2-3
40	RED	16-18 AWG	TB1, MR1-A, SOC1-6, KB1-4
40A	RED	16-18 AWG	MR1-B, OL1
41	RED	16-18 AWG	TB1, SOC1-10, KB2-4
42	RED	16-18 AWG	TB1, KB1-4
46	RED	16-18 AWG	TB1, SOC1-14
47	RED	16-18 AWG	TB1, FL1-BLK, KB3-1, KB3-3
48	RED	16-18 AWG	TB1, SOC1-5, KB3-4, LT1-X1
50	RED	16-18 AWG	TB1, SOC1-9, SOC1-12, KB3-2
51	RED	16-18 AWG	TB1, SOC1-4, LT2-X1
---	GREEN	14 AWG	TB1, PNL GRD
---	GREEN	14 AWG	ENCL BODY, ENCL DOOR [h]

[h] IF DOOR HAS GROUNDING PROVISION. USE BODY GROUNDING PROVISION. USE TB1 IF BODY DOES NOT HAVE GROUNDING PROVISION.

OPTIONAL WIRING - AUDIBLE &/OR VISUAL ALARM			
2	WHITE	16-18 AWG	SOC2-13, ALM1-N (IF AUD ALM) LT5-X2 (IF VIS ALM)
47	RED	16-18 AWG	SOC2-9
55	RED	16-18 AWG	TB1, SOC2-14
56	RED	16-18 AWG	TB1, SOC2-5, ALM1-LA, ALM1-LB (IF AUD ALM) LT5-X1 (IF VIS ALM)

TABLE 2		
VIS ALM	AUD ALM	TOTAL FLA.
NO	NO	5.1 A
YES	NO	5.1 A
NO	YES	5.1 A
YES	YES	5.2 A

TABLE 1							
NEMA 12		OPTIONAL NEMA 4		OPTIONAL NEMA 4X STAINLESS		OPTIONAL NEMA 4X FIBERGLASS	
ENCL	PNL	ENCL	PNL	ENCL	PNL	ENCL	PNL
2751-0084	2751-0085	2751-0070	2751-0085	2751-0142	2751-0085	2751-0144	2751-0032

Generic Drawings shown
Provide serial number for specific drawings

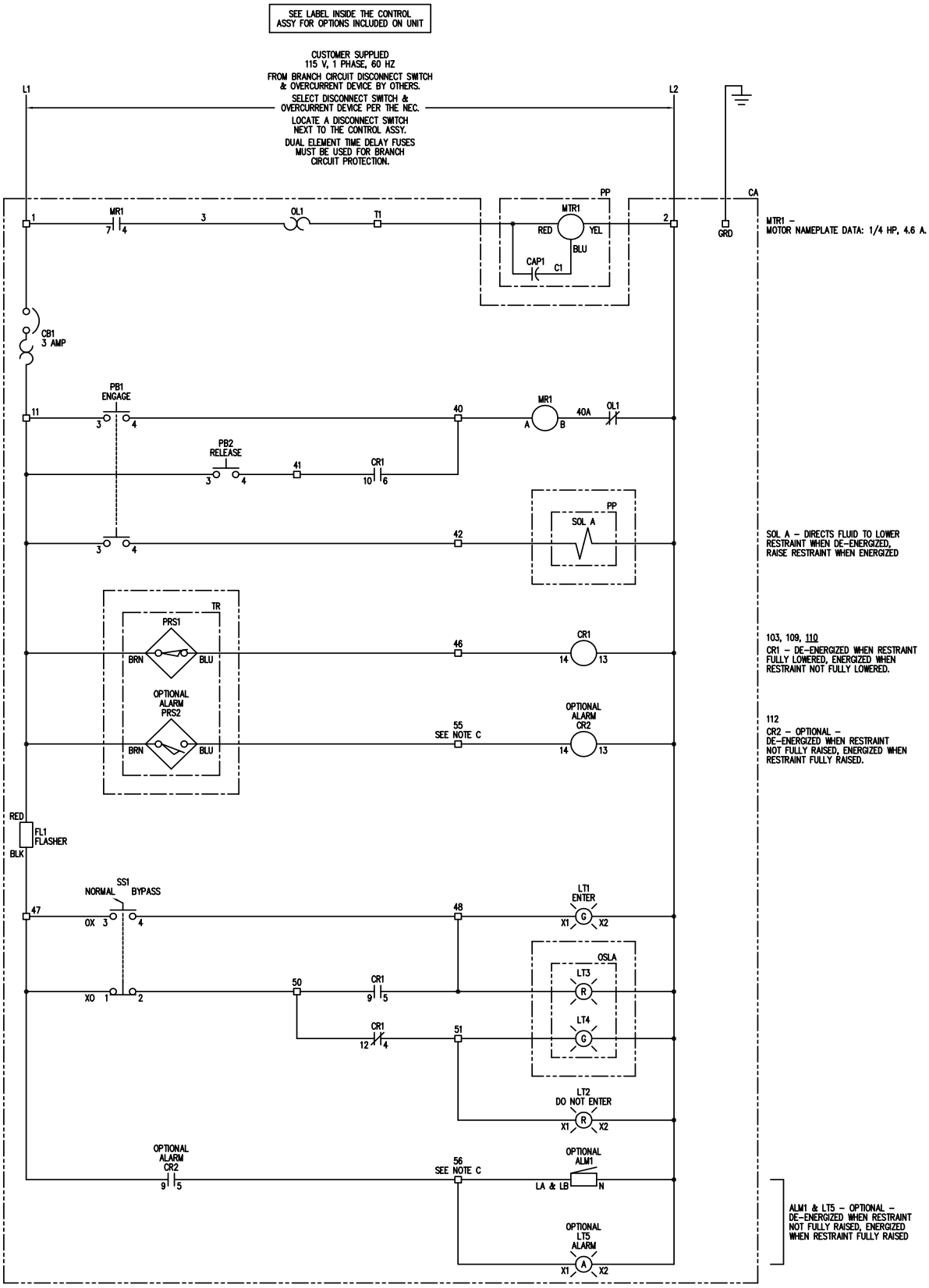

Generic Drawings shown
Provide serial number for specific drawings

Outside Signs

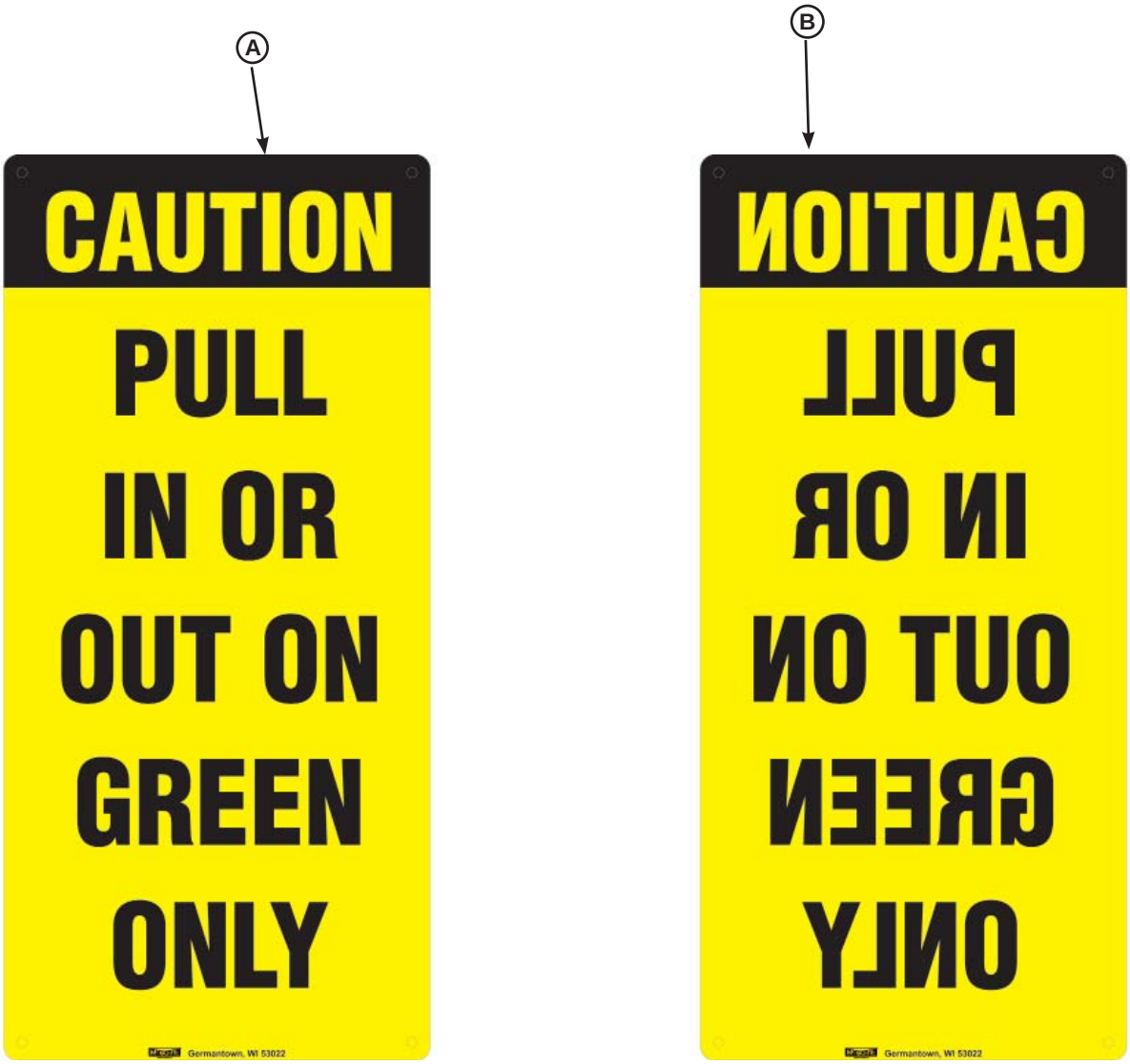

Item	Quantity	Part Number	Description
A	1	1751-0033	SIGN,PULL IN/OUT ON GREEN ONLY RIGHT READING,16-7/8x8x3/32
B	1	1751-0034	SIGN,PULL IN/OUT ON GREEN ONLY MIRROR IMAGE,16-7/8x8x3/32

OSLA (Outside Light Assembly)

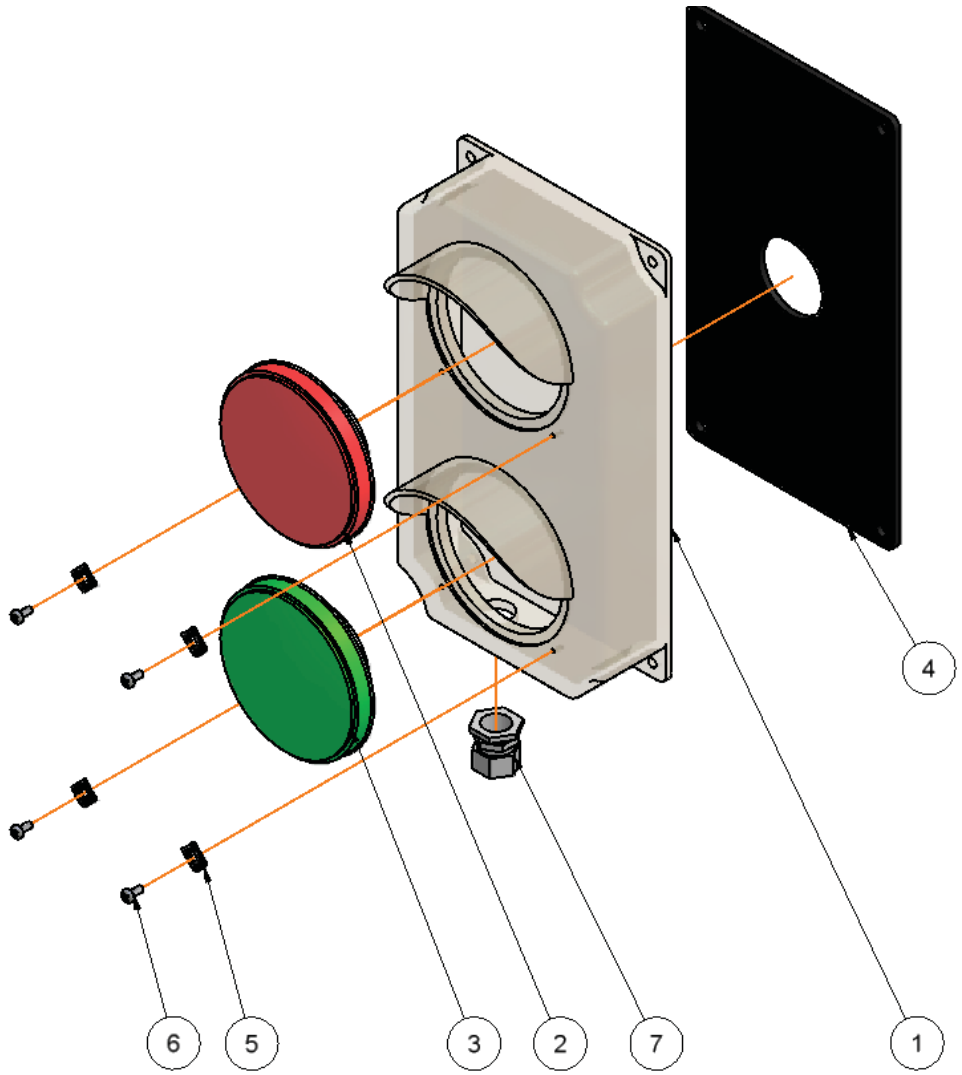

Item	Quantity	Part Number	Description
1-7	1	3055-0008	Complete Light Housing, Yellow Plastic, LED Lights
1-7	1	3055-0002	Complete Light Housing, Yellow Plastic, Incandescent Lights
1	1	3051-0002	Light Housing Only, Yellow Plastic
2	1	3051-0064	Lens Red, for use with incandescent bulbs
3	1	3051-0065	Lens Green, for use with incandescent bulbs
*	2	3051-0085	Lamp, 25W,120V,Incandescent, BAY (Rated 1000 Hours)
*	2	3051-0066	Socket Harness for Incandescent Lamp
2	1	3051-0102	Lens/Housing/Circuit Assembly Red-LED
3	1	3051-0103	Lens/Housing/Circuit Assembly Green-LED
4	1	3051-0068	Mounting Gasket
5	4	3051-0105	Clips, Lens Holding
6	4	3051-0104	Screw, Lens Holding Clip
7	1	x	Conduit Fastener, 3/4” x 3/8”

A

DANGER

- Read and follow all instructions, warnings and maintenance schedules in the manual and on placards.
- Vehicle restraint operation and servicing is restricted to trained personnel.

1 Before using the vehicle restraint:
- Remove any debris, snow or ice that may obstruct vehicle restraint operation.
- Alert personnel in the area of potential vehicle restraint operation and ensure area is clear.
- Operate the vehicle restraint thru one complete cycle, inspecting it for proper operation and light sequence. Advise maintenance personnel of any damage or improper operation immediately. Remove all malfunctioning or damaged vehicle restraints from service using approved lockout/tagout procedures.

2 Before attempting to restrain a transport vehicle:
- Verify that transport vehicle is positioned squarely against dock bumpers
- Inspect the transport vehicle's rear impact guard (RIG). Damaged or missing RIGs may not allow the vehicle restraint to securely capture the RIG. Wheel chocks must be used whenever the ability for the vehicle restraint to capture the RIG is in question. **(NOTE: The transport vehicle's suspension and load condition will effect trailer height.)**

3 After activating vehicle restraint:
- Verify that the transport vehicle's RIG has been restrained successfully. In the event this cannot be determined use wheel chocks in addition to restraint.
- If equipped with a light communication package load and unload on GREEN light only.

4 Maintenance or service must be performed by authorized personnel only. Follow approved lockout/tagout procedures.

FAILURE TO FOLLOW THESE INSTRUCTIONS COULD RESULT IN DEATH OR OTHER SERIOUS INJURY.

POWERAMP McGUIRE DLM SYSTEMS, INC. Loading Dock Equipment

1.262.255.1510 or 1.800.643.5424

Call for additional placards, or manuals, or with questions regarding proper use, maintenance, and repair of dock leveler.
www.**DockSystemsInc**.com

Use with PowerHook, Powerhold, Holdtite and TPR series

1751-0880

OPERATING INSTRUCTIONS

VEHICLE RESTRAINTS

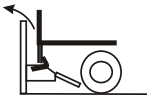

ENGAGE RESTRAINT

1 Open overhead door and visually check that truck is positioned squarely against dock bumpers and has a RIG bar. Inside light is RED and outside light is GREEN.

2 Depress the ENGAGE button to activate restraint.

3 Once RIG has been secured inside light is GREEN outside light is RED

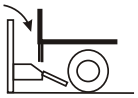

RELEASE RESTRAINT

1 To release truck restraint depress the RELEASE button. When safely stored inside light is RED and outside light is GREEN.

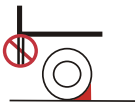

BY-PASS

1 If restraint is unable to secure transport vehicle's RIG, use wheel chocks to secure transport vehicle at the dock.

2 Turn switch to BY-PASS. Inside light is GREEN outside light is RED.

3 Loading/unloading may proceed with caution.

BY-PASS RESET (RETURN TO NORMAL OPERATION)

1 When loading or unloading is completed, and wheel chocks are removed, manual reset of BY-PASS is accomplished by depressing the RELEASE button or turning switch to NORMAL. Lights change to RED inside GREEN outside.

Item	Quantity	Part Number	Description
A	1	1751-0880	Placard Vehicle Restraint

Customer Information

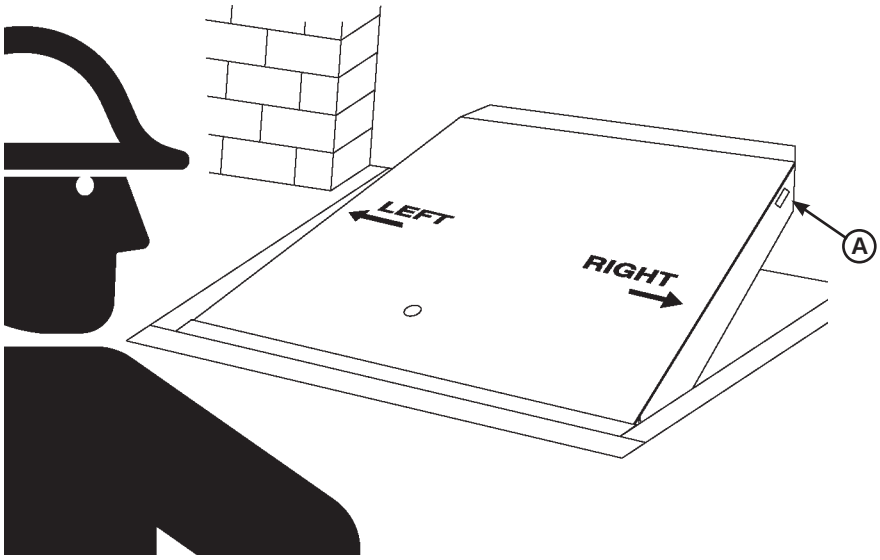

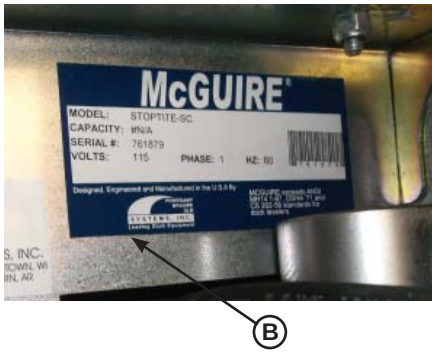

NOTE: Refer to illustration for left/right orientation of dock leveler.

The LEVELER model/serial number decal (A) is located on the right platform joist near the front (lip) of dock leveler.

The RESTRAINT model/Serial number decal (B) is located on the right side.

When you receive your new equipment, write down the model and serial number in the form provided. This will help ensure safe keeping of the numbers in the event the model/serial number decal (A) becomes lost or damaged.

Also, write down Systems, Inc.'s job number, the company that installed the dock leveler, and the original owner's name. This will all help to identify the specific dock leveler if more information is required.

When ordering, use part numbers and description to help identify the item ordered. Do not use "item" numbers. These are only for locating the position of the parts. Always give dock leveler MODEL NUMBER and/or SERIAL NUMBER.

For service, call or contact:

Systems, Inc.
P.O. Box 309
Germantown, WI 53022

Phone: (800) 643-5424
Fax: (262) 255-5917

Restraint Information

Model _____

Serial No. _____

Systems, Inc., Job No. _____

Dock Leveler Information

Model _____

Serial No. _____

Systems, Inc., Job No. _____

Original Owner Information

Name _____

Address _____

_____

Installer Information

Name _____

Address _____

_____

Date of Installation

STANDARD PRODUCT WARRANTY

SYSTEMS, INC. warrants that its products will be free from defects in design, materials and workmanship for a period of one (1) year from the date of shipment. All claims for breach of this warranty must be made within 30 days after the defect is or can with reasonable care, be detected. In no event shall any claim be made more than 30 days after this warranty has expired. In order to be entitled to the benefits of this warranty, the product must have been properly installed, maintained and operated in accordance with all manufacturer's recommendations and/or specified design parameters and not otherwise have been subject to abuse, misuse, misapplication, acts of nature, overloading, unauthorized repair or modification, application in a corrosive environment or lack of maintenance. Periodic lubrication, adjustment and inspection in accordance with all manufacturers' recommendations are the sole responsibility of the Owner/User.

In the event of a defect, as determined by SYSTEMS INC., covered by this warranty, SYSTEMS INC. shall remedy such defect by repairing or replacing any defective equipment or parts, bearing the cost for the parts, labor and transportation. This shall be exclusive remedy for all claims whether based on contract, negligence or strict liability.

WARRANTY LIMITATIONS

THE ABOVE WARRANTIES ARE IN LIEU OF ANY OTHER WARRANTIES, WHETHER EXPRESSED OR IMPLIED, INCLUDING BUT NOT LIMITED TO ANY IMPLIED WARRANTY OF MERCHANTABILITY OR FITNESS FOR A PARTICULAR PURPOSE. SYSTEMS INC. AND ITS SUBSIDARIES SHALL NOT IN ANY EVENT BE LIABLE TO ANYONE, INCLUDING THIRD PARTIES, FOR INCIDENTAL, CONSEQUENTIAL OR SPECIAL DAMAGES OF ANY KIND INCLUDING BUT NOT LIMITED TO, BREACH OF WARRANTY, LOSS OF USE, LOSS OF PROFIT, INTERUPTION OF BUSINESS OR LOSS OF GOODWILL.